CITY OF ROGERSVILLE
STANDARD DRAWING DETAILS
FOR
PUBLIC IMPROVEMENTS

Rogersville
MISSOURI

2022 EDITION
CITY OF ROGERSVILLE, MISSOURI

CITY OF ROGERSVILLE

STANDARD DRAWING DETAILS

Below is an Index to the Standard Drawing Details for Public Improvements for the City of Rogersville. These details shall be incorporate into private and public improvement Projects within the City of Rogersville.

Title	Drawing Designation
1. FENCING	
Fencing Details	FEN-1
2. PIPE	
Embedment of Pipe Details	PIPE-1
Bore/Encasement Detail	PIPE-2
Thrust Block Details	PIPE-3
Tracer Wire Schematic Detail	PIPE-4
Residential Utilities Detail	PIPE-5
3. SANITARY SEWER	
Standard Manhole Detail	SEW-1
Standard Inside Drop Manhole Detail	SEW-2
Typical Shallow Manholes	SEW-3
New Manhole on Existing Line	SEW-4
Connection to Existing Manhole Detail	SEW-5
Type A Manhole Frame and Lid	SEW-6
Type B Manhole Frame and Lid	SEW-7
Standard Sewer Service Detail	SEW-8
Grease Interceptor Detail	SEW-9
Sampling Manhole Detail	SEW-10
Cleanout Riser Detail	SEW-11
Air Relief Valve	SEW-12
4. STORM DRAINAGE	
Curb Inlets Detail	STM-1
Top Slab Reinforcement	STM-2
Standard Junction Box & Storm Manhole Detail	STM-3
Ring and Cover for Storm Inlet, Storm Manhole & Junction Box	STM-4
Concrete Culvert Cap for Driveways	STM-5

Title	Drawing Designation
5. STREETS	
Typical Pavement Details	STR-1
Standard Curb Details	STR-2
Cul-De-Sac Plan Minimum Standards	STR-3
Temporary Dead Ends Minimum Standards	STR-4
"T" Hammerheads Minimum Standards	STR-5
Asphalt Street Repair Detail	STR-6
Concrete Street Repair Detail	STR-7
Curb Ramp Type I	STR-8
Curb Ramp Type II	STR-9
Curb Ramp Type III	STR-10
Curb Ramp Type IV	STR-11
4' Sidewalk Details	STR-12
Residential Driveway and Sidewalk	STR-13
Commercial Driveway and Sidewalk	STR-14
6. WATER	
Valve Details	WAT-1
Fire Hydrant Details	WAT-2
Corporation Stop Detail	WAT-3
5/8", 3/4" & 1" Meter Details	WAT-4
2" Plus Commercial Meter Detail	WAT-5

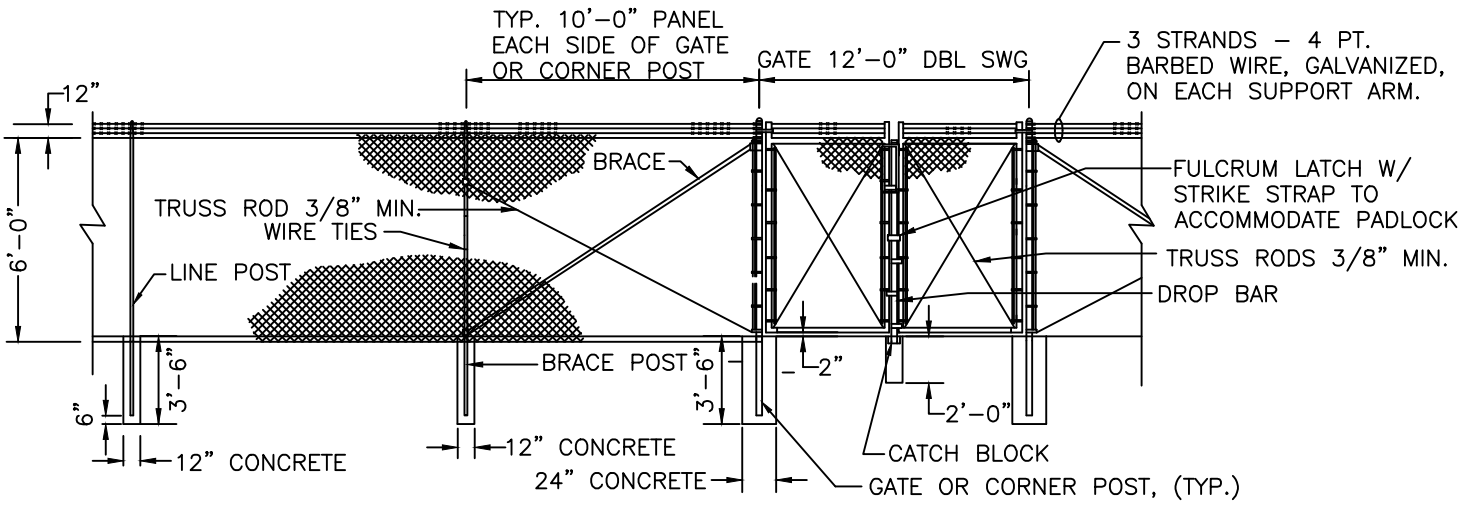

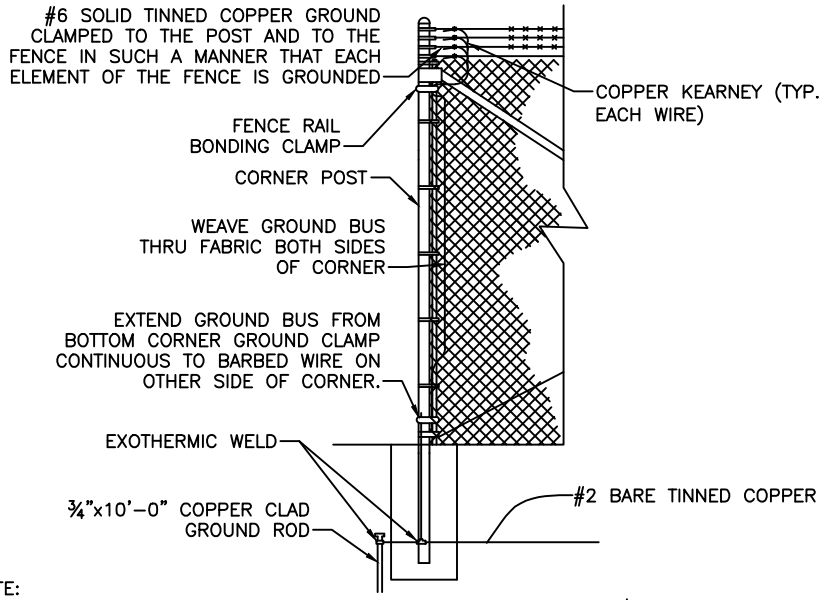

NOTE:
CONTRACTOR SHALL FURNISH
& INSTALL TINNED COPPER
BRAID ON EACH SWING GATE.

CHAIN LINK FENCE
CORNER GROUNDING

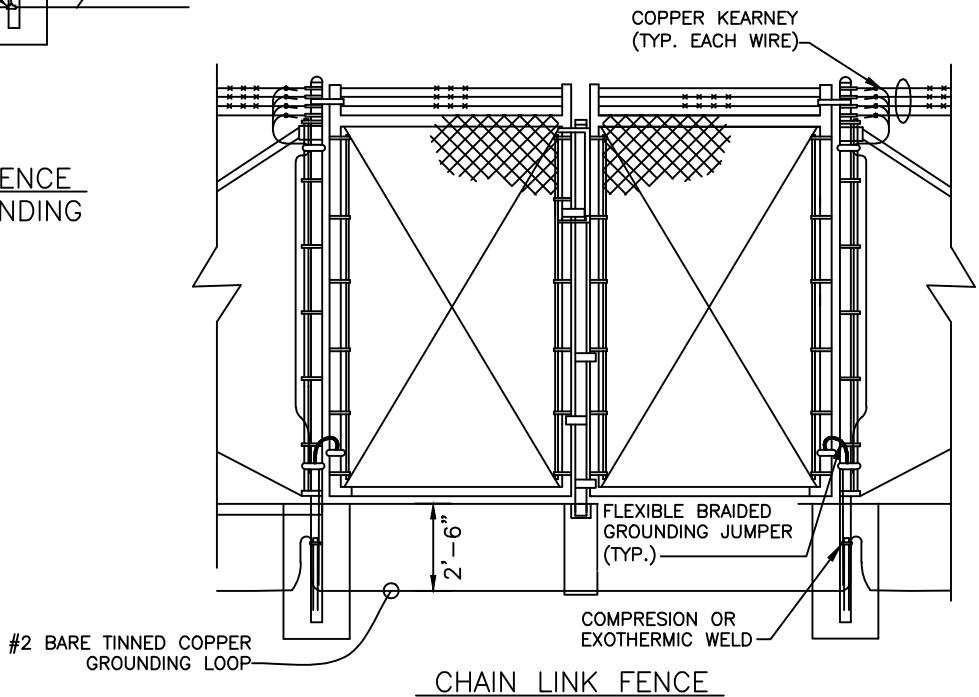

CHAIN LINK FENCE
GATE GROUNDING

CITY OF ROGERSVILLE	FENCING DETAILS	FEN-1	
	NTS	DATE 9/1/21	REVISION

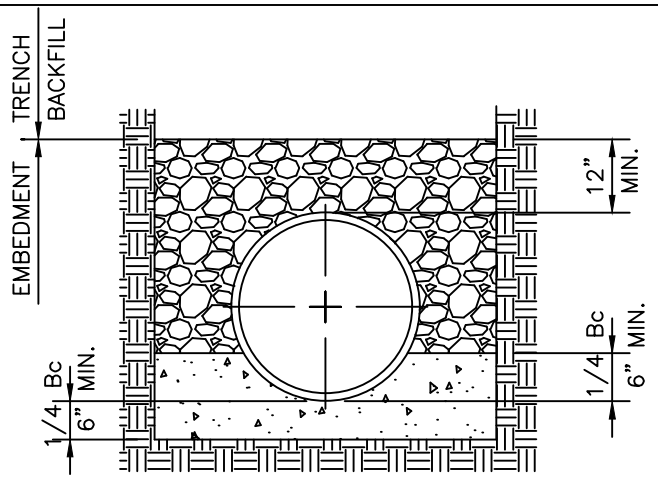

CLASS A
CONCRETE CRADLE

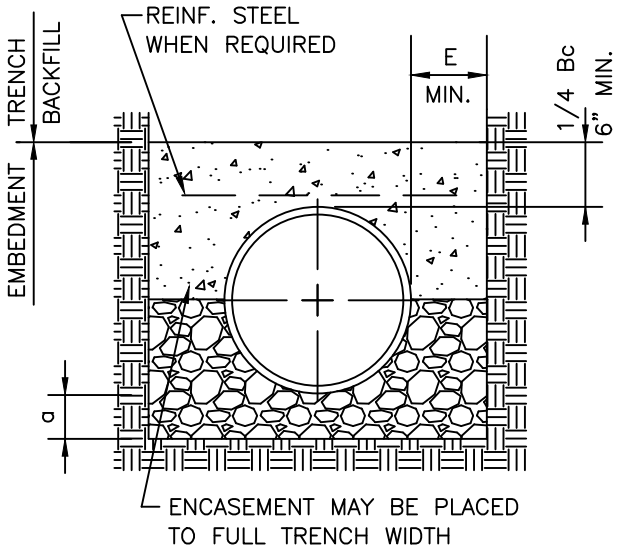

CLASS A
CONCRETE ARCH

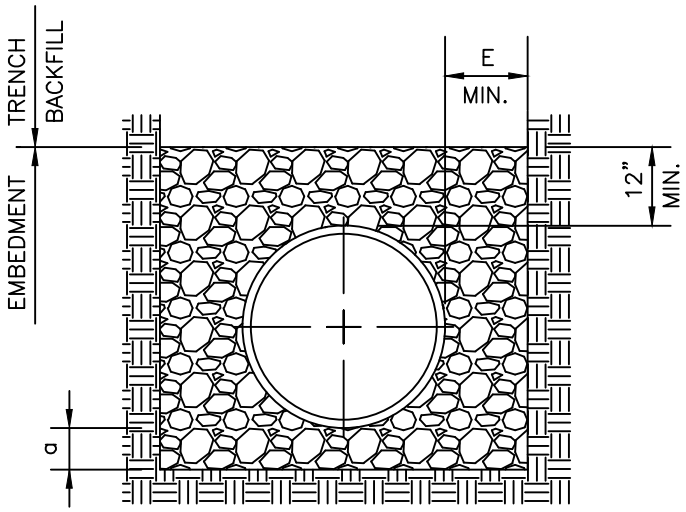

CLASS B
FIRST CLASS BEDDING

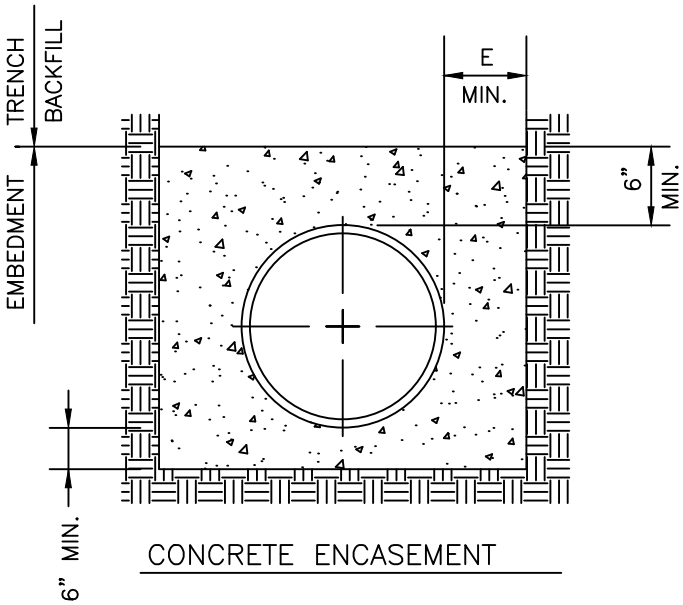

CONCRETE ENCASEMENT

TABLE OF EMBEDMENT DEPTHS BELOW PIPE

SOIL TRENCH		
BEDDING CLASS	PIPE O.D.	a MIN.
A AND B	24" AND SMALLER	6"
A AND B	LARGER THAN 24"	1/4 O.D.

ROCK TRENCH		
BEDDING CLASS	PIPE O.D.	a MIN.
A AND B	24" AND SMALLER	6"
A AND B	LARGER THAN 24"	1/4 O.D.

E = 12" (LESS THAN 27" DIA. PIPE)
E = ID/2 (27" TO 60" PIPE)
E = TO BE DETERMINED (LARGER THAN 60" PIPE)

LEGEND

Bc	OUTSIDE DIA. OF PIPE
a	EMBEDMENT BELOW PIPE
	GRANULAR EMBEDMENT
	CONCRETE
	UNDISTURBED EARTH

NOTE:
1. ALL UTILITIES SHALL BE INSPECTED AND APPROVED BY THE CITY OF ROGERSVILLE PRIOR TO BACKFILLING.
2. EXTEND GRANULAR EMBEDMENT MATERIAL TO THE BASE MATERIAL UNDER IMPROVED SURFACES
3. COMPACT GRANULAR EMBEDMENT IN 6" MAX. LIFTS TO 95% STANDARD PROCTOR DENSITY.
4. COMPACT TRENCH BACKFILL IN 12" MAX. LIFTS TO 85% OF THE MAX. DENSITY FOR UNIMPROVED AREAS AND 95% OF THE MAX. DENSITY FOR IMPROVED AREAS.
5. PROVIDE TRACER WIRE ON TOP OF ALL WATER MAINS AND WATER / SEWER SERVICES.

CITY OF ROGERSVILLE	EMBEDMENT OF PIPE DETAIL	PIPE-1	
	NTS	DATE 9/1/21	REVISION

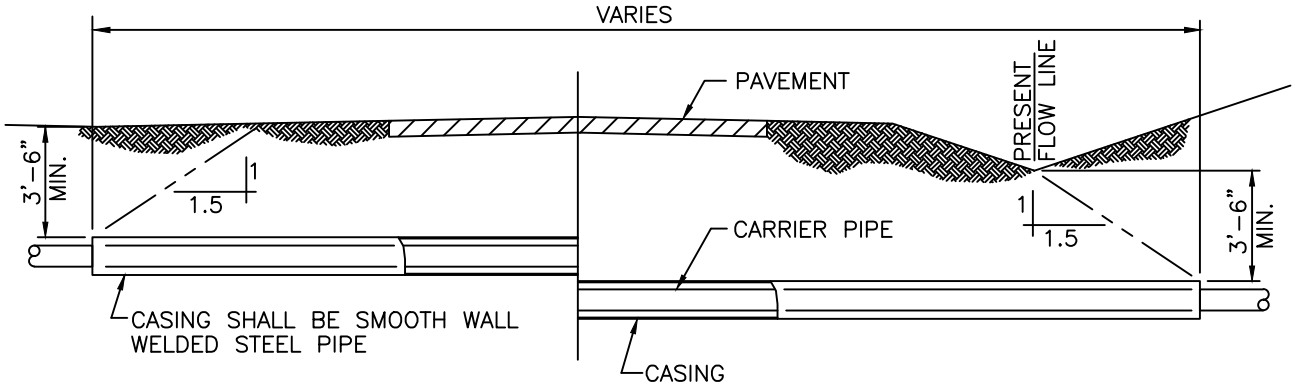

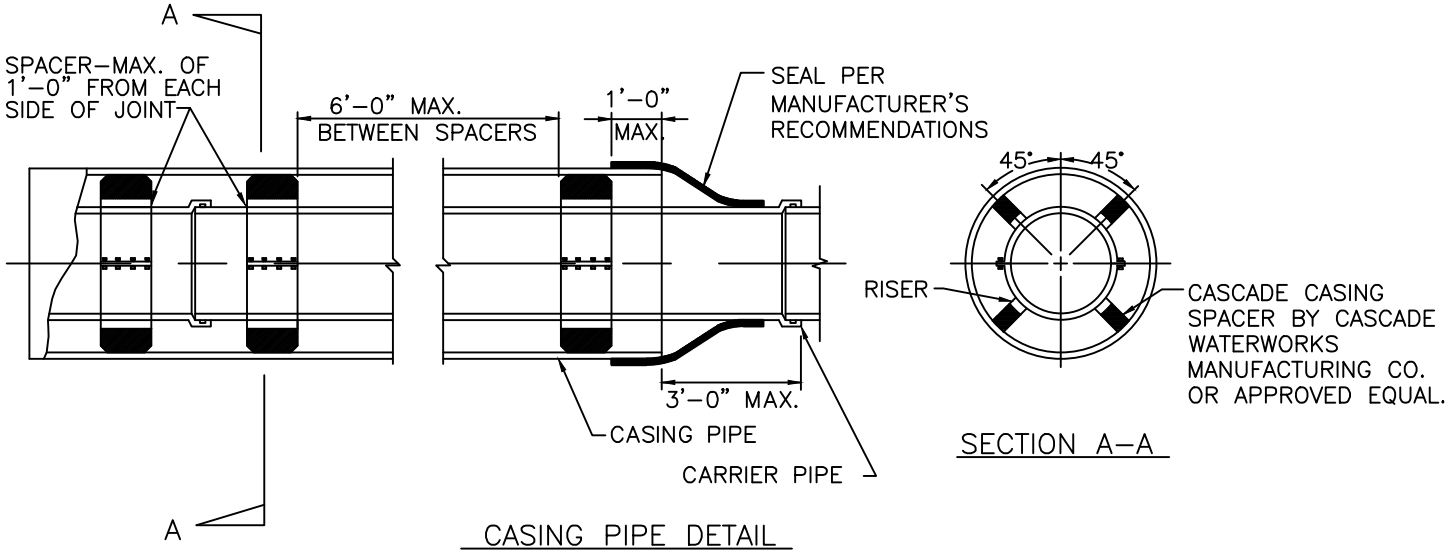

DETAIL NOTES:

1. DEPTH OF BORING PIT SHALL BE AS REQUIRED.
2. THE DRILLED HOLE FOR THE CASING PIPE SHALL BE SLIGHTLY UNDERSIZED AND THE PIPE JACKED THROUGH TO ELIMINATE VOIDS BETWEEN PIPE AND HOLE.
3. BOTH ENDS OF CASING WILL BE SEALED AS PER MANUFACTURER'S RECOMMENDATION.
4. #12 AWG COPPER CLAD STEEL TRACER WIRE SHALL BE PROVIDED. THE TRACER WIRE SHALL BE TOTALLY ANNEALED 1055 STEEL, EXTRA HIGH STRENGTH WITH A BREAK LOAD OF 452 LB AND A 30 MIL MINIMUM HDPE COATING. REQUIRED FOR PRESSURE PIPE APPLICATIONS.
5. MATERIALS TO BE USED FOR THIS PURPOSE SHALL NOT BE LESS THAN TEN FOOT LENGTHS.
6. ALL JOINT ENDS SHALL BE CUT AT 90 DEGREES TO THE LONGITUDINAL AXIS OF THE PIPE.
7. EACH END SHALL BE BEVELED AND JOINTS SHALL BE BUTT WELDED AROUND THE ENTIRE PERIMETER OF THE PIPE.
8. WOOD SKIDS SHALL NOT BE ALLOWED.

SMOOTH WALL, WELDED STEEL PIPE WITH A MINIMUM WALL THICKNESS AS FOLLOW WILL BE PERMITTED:

CASING DIAMETER (INCHES)	MINIMUM WALL THICKNESS
LESS THAN 6	0.250
6, 8, 10, 12, 14, 16	0.250
18, 20, 22	0.250
24, 26	0.281
28, 30, 32, 34	0.312
36, 38, 40, 48	0.344

CITY OF ROGERSVILLE	BORE/ENCASEMENT DETAIL	PIPE-2	
	NTS	DATE 9/1/21	REVISION

PIPE SIZE	FITTING	DISTANCE IN INCHES				
		A	B	C	D	E
4" AND SMALLER	11.25 & 22.5°	32	28	3	7	14
	45°	32	28	4	7	14
	90°	34	28	6	7	14
	TEE/PLUG	36	28	7	7	14
6"	11.25 & 22.5°	35	29	4	9	15
	45°	36	29	6	9	15
	90°	38	29	7	9	15
	TEE/PLUG	40	29	9	9	15
8"	11.25 & 22.5°	38	31	5	11	17
	45°	40	31	6	11	17
	90°	52	34	9	11	22
	TEE/PLUG	44	31	11	11	17
10" & 12"	11.25 & 22.5°	44	34	7	15	19
	45°	47/59	37	10	15	24
	90°	70/91	38/44	13	15	30/39
	TEE/PLUG	57/71	35/39	15	15	22/28
14" & 16"	11.25 & 22.5°	53	38	7	19	23
	45°	72/85	45	10	19	31/37
	90°	108/129	49/55	18	19	46/56
	TEE/PLUG	88/102	47	19	19	35/41
18"	11.25 & 22.5°	61	41	9	22	26
	45°	98	50	11	22	44
	90°	142	58	20	22	61
	TEE/PLUG	118	52	22	22	48

NOTES:

1. THRUST BLOCKS ARE BASED ON A WORKING PRESSURE OF 200 P.S.I., 42" COVER, & 2000 P.S.F. ALLOWABLE SOIL BEARING PRESSURE.
2. FOR PIPE SIZES NOT SHOWN USE DIMENSIONS FOR NEXT LARGER SIZE.
3. CONCRETE SHALL BE POURED AGAINST UNDISTURBED SOIL.
4. ALL THRUST BLOCKS TO BE INSPECTED BY CITY OF ROGERSVILLE BEFORE BACKFILLING.

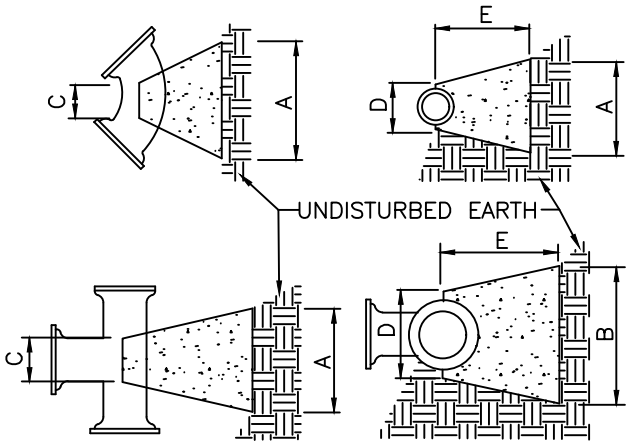

CONCRETE THRUST BLOCK DETAIL

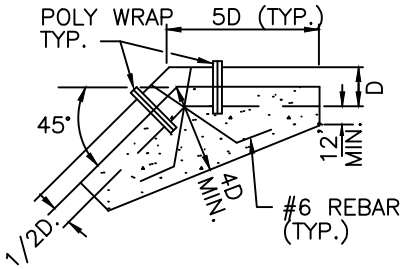

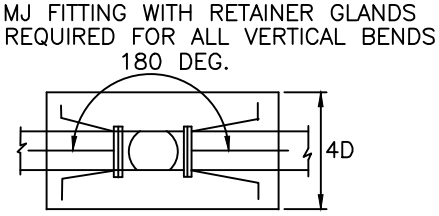

NOTE; ALSO PROVIDE MEGALUG RETRAINED JOINTS ON BOTH SIDES OF VERTICAL THRUST BLOCK.

VERTICAL BEND THRUST BLOCK DETAIL

CITY OF ROGERSVILLE	THRUST BLOCK DETAILS	PIPE-3	
	NTS	DATE 9/1/21	REVISION

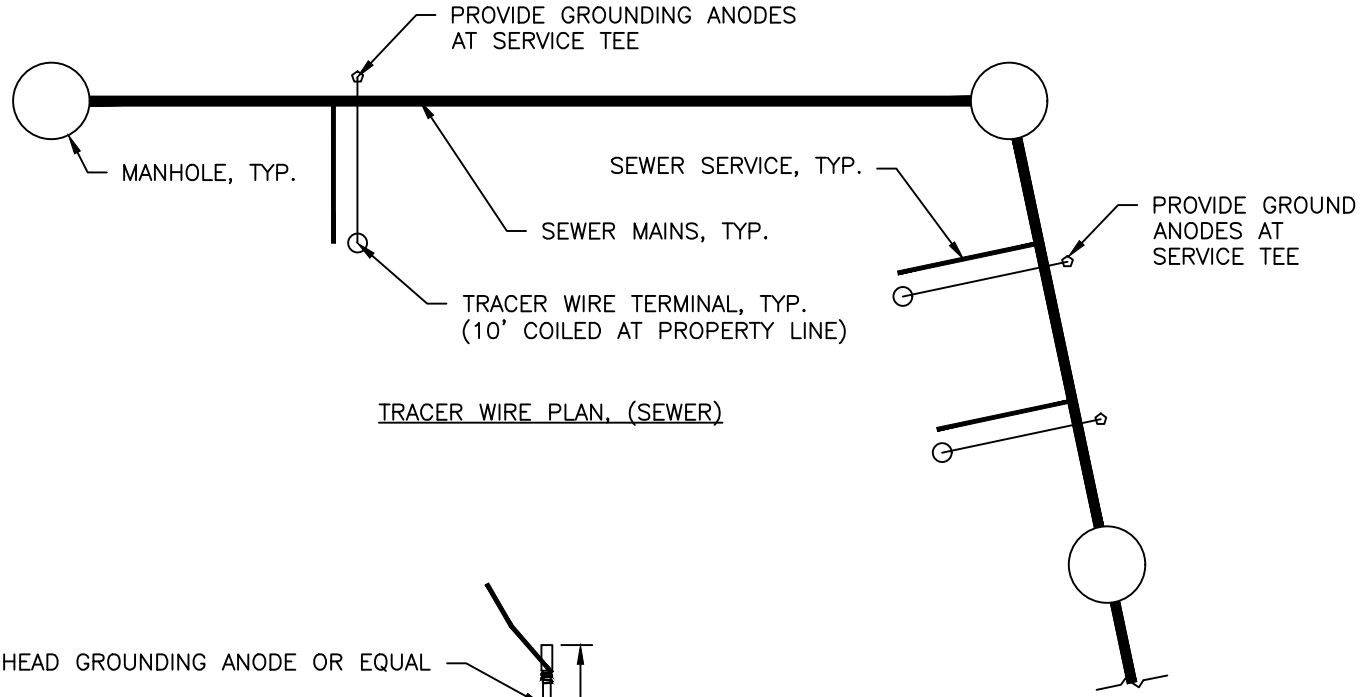

TRACER WIRE PLAN, (SEWER)

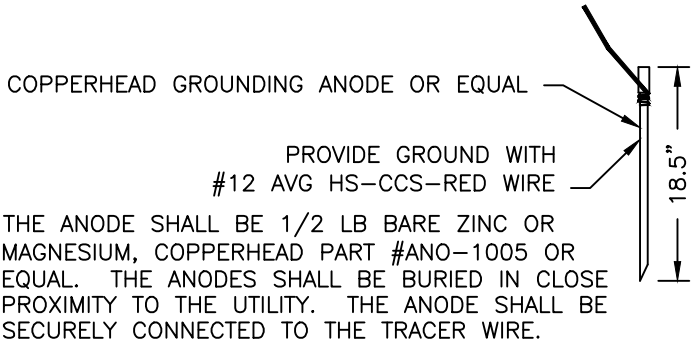

THE ANODE SHALL BE 1/2 LB BARE ZINC OR MAGNESIUM, COPPERHEAD PART #ANO-1005 OR EQUAL. THE ANODES SHALL BE BURIED IN CLOSE PROXIMITY TO THE UTILITY. THE ANODE SHALL BE SECURELY CONNECTED TO THE TRACER WIRE.

ANODE

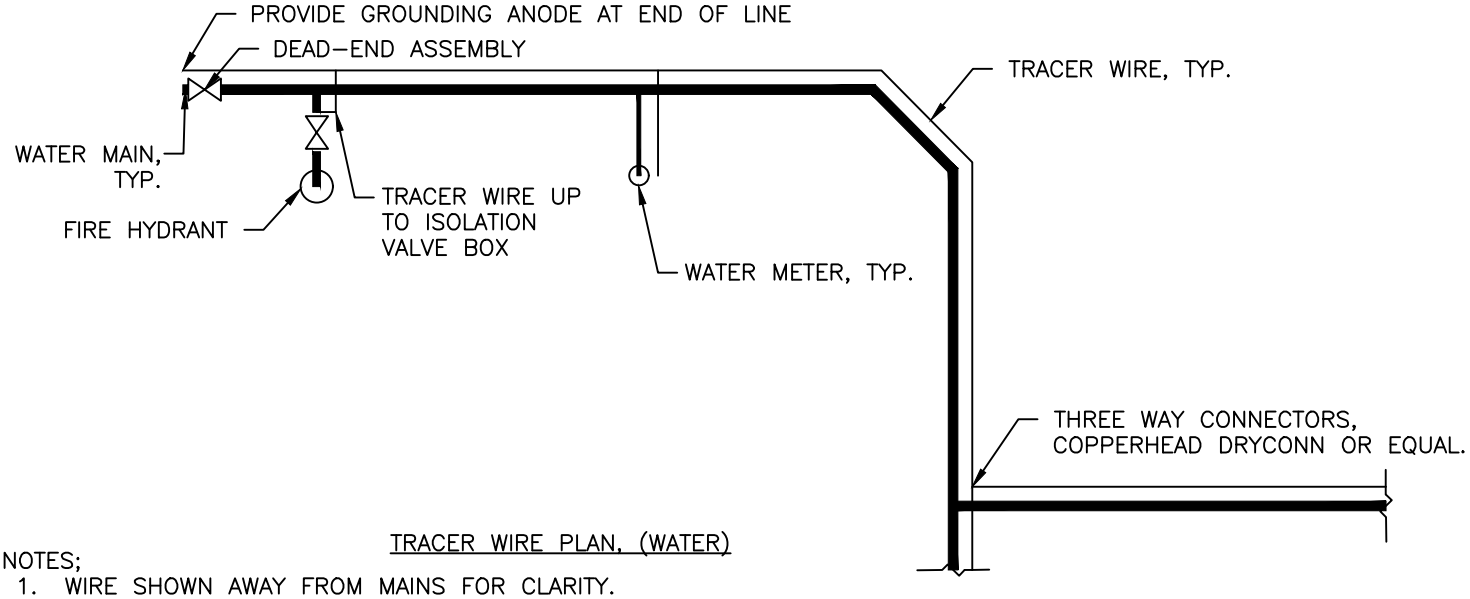

TRACER WIRE PLAN, (WATER)

NOTES;

1. WIRE SHOWN AWAY FROM MAINS FOR CLARITY.
2. WIRE SHALL BE INSTALLED ON THE TOP SIDE OF ALL WATER MAINS AND WATER/SEWER SERVICES.
3. TRACER WIRE SHALL BE #12 AWG COPPER CLAD STEEL, HIGH STRENGTH, TOTALLY ANNEALED 1055 STEEL WITH A BREAK LOAD OF 452 LB AND A 30 MIL MINIMUM THICKNESS HDPE COATING.
4. WIRE SHALL BE GROUNDED AT ALL ENDS AND AT 500' MAXIMUM SPACING.
5. PROVIDE ACCESS BOXES AND GROUNDS ALONG FORCEMAINS AS NECESSARY TO ACHIEVE 500' MAXIMUM SPACING FOR SPLICES AND GROUNDING.

CITY OF ROGERSVILLE	TRACER WIRE SCHEMATIC DETAIL	PIPE-4	
	NTS	DATE 9/1/21	REVISION

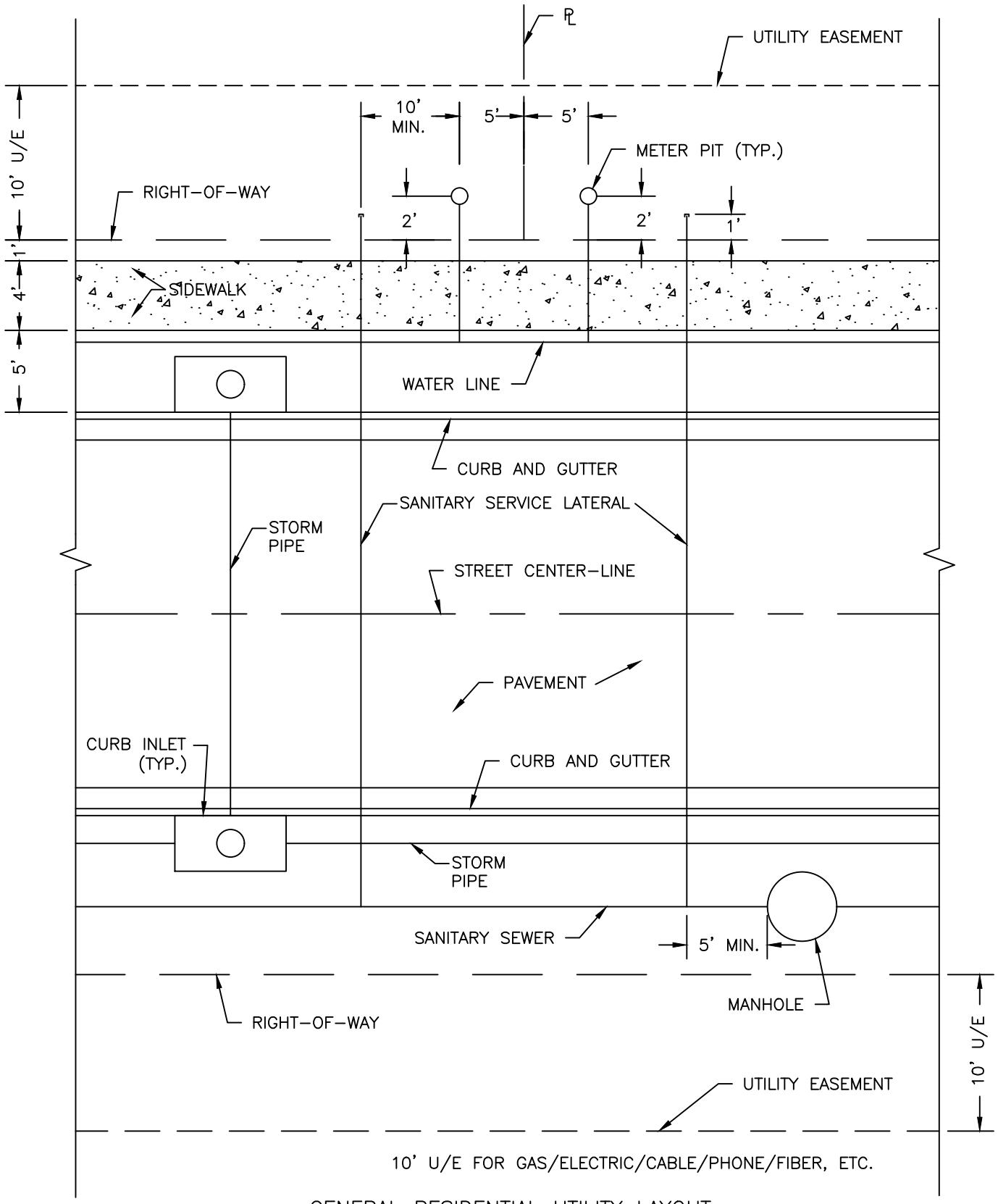

GENERAL RESIDENTIAL UTILITY LAYOUT

NOTES;
1. THE ABOVE INDICATES A GENERAL LAYOUT FOR UTILITIES WITHIN RESIDENTIAL SUBDIVISIONS.
2. SOME VARIATION MAY OCCUR, BUT THE MINIMUM SPACINGS, SEPARATIONS AND CLEARANCES SHALL APPLY.

CITY OF ROGERSVILLE	RESIDENTIAL UTILITIES DETAIL NTS	PIPE-5	
		DATE 9/1/21	REVISION

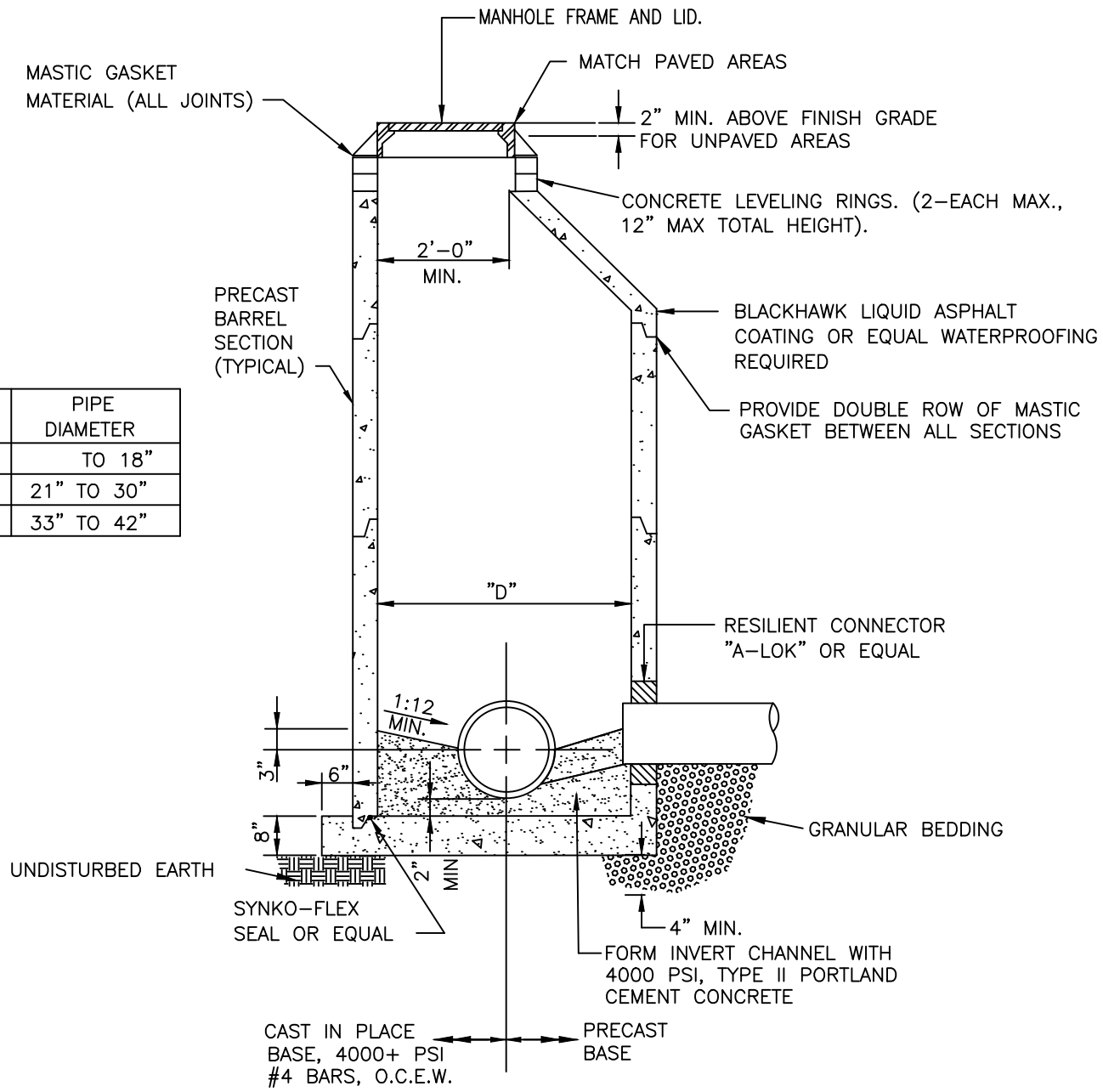

"D"	PIPE DIAMETER
4'-0"	TO 18"
5'-0"	21" TO 30"
6'-0"	33" TO 42"

NOTES:

1. ONLY ECCENTRIC MANHOLE CONES ARE PERMITTED UNLESS OTHERWISE APPROVED BY THE PUBLIC WORKS DIRECTOR.
2. PROVIDE 15 MIL. MIN. COATING OF BLACKHAWK LIQUID ASPHALT COATING 5011 OR EQUAL ON ENTIRE EXTERIOR OF MANHOLE.
3. CIRCULAR PRECAST MANHOLE SECTIONS SHALL BE SEALED WITH A DOUBLE ROW OF MASTIC GASKETS.
4. MANHOLE WALL THICKNESS SHALL BE 1/12 OF THE INSIDE DIAMETER PLUS ONE INCH.
5. PRECAST MANHOLE SECTIONS AND STEEL REINFORCEMENT SHALL CONFORM TO ASTM C 478, EXCEPT AS MODIFIED.
6. DO NOT PROVIDE MANHOLE STEPS.
7. NO GROUTING SHALL BE PERMITTED ON MANHOLES AND RINGS, EXCEPT THE LIFT HOLES SHALL BE GROUTED.
8. THE MINIMUM DROP BETWEEN INLET AND OUTLET INVERTS SHALL BE 0.2'.
9. THE MAXIMUM DROP BETWEEN INLET AND OUTLET INVERTS SHALL BE 24".
10. THE MINIMUM ANGLE FOR FLOWLINES WITHIN THE MANHOLE SHALL BE 90 DEGREES
11. FOR NEW MANHOLE ON EXISTING PIPING, SEE SEW-4

CITY OF ROGERSVILLE	STANDARD MANHOLE DETAIL NTS	SEW-1	
		DATE 9/1/21	REVISION

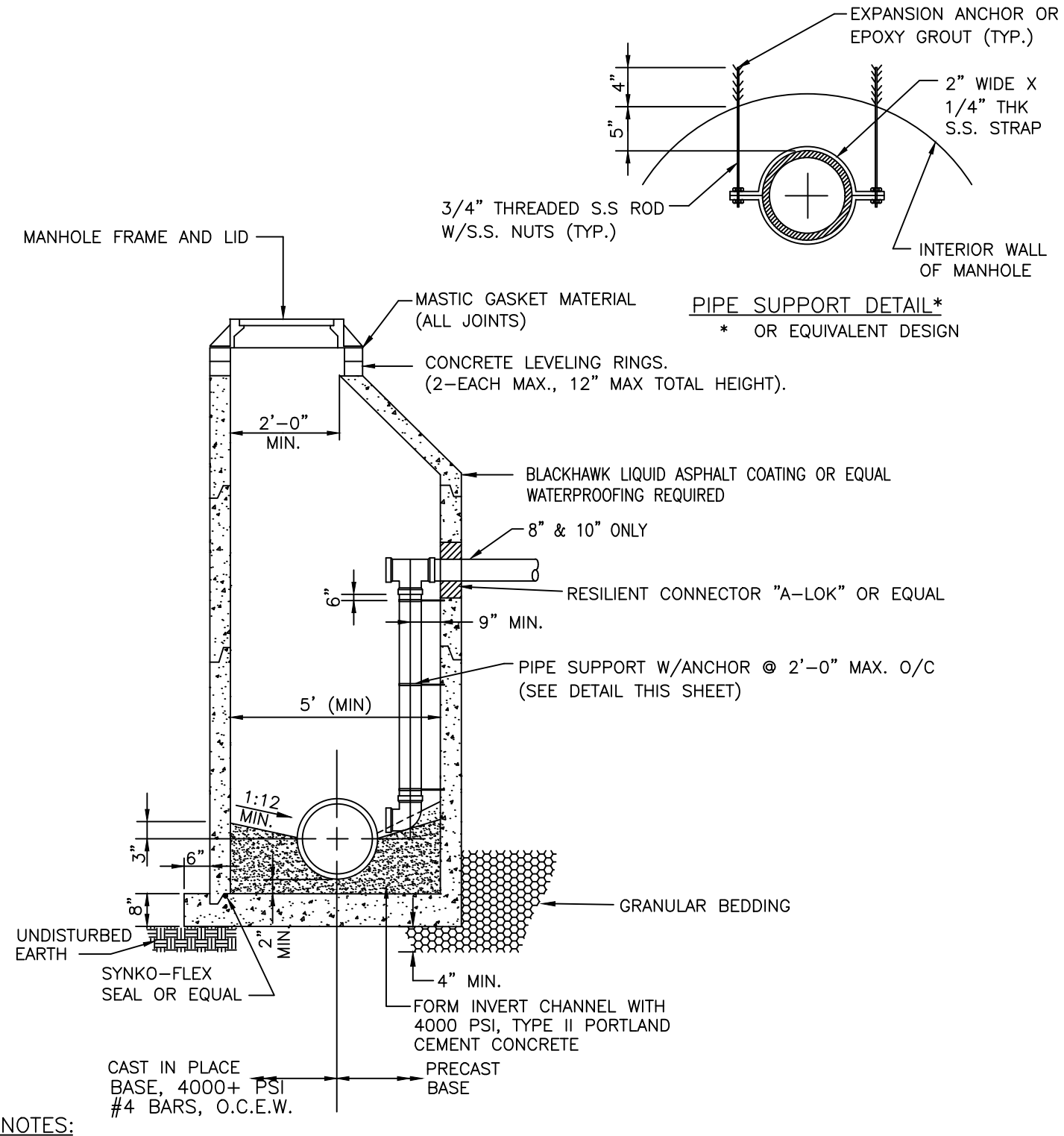

NOTES:

1. ONLY ECCENTRIC MANHOLE CONES ARE PERMITTED UNLESS OTHERWISE APPROVED BY THE PUBLIC WORKS DIRECTOR.
2. PROVIDE 15 MIL. MIN. COATING OF BLACKHAWK LIQUID ASPHALT COATING OR EQUAL ON ENTIRE EXTERIOR OF MANHOLE.
3. CIRCULAR PRECAST MANHOLE SECTIONS SHALL BE SEALED WITH A DOUBLE ROW OF MASTIC GASKETS.
4. MANHOLE WALL THICKNESS SHALL BE 1/12 OF THE INSIDE DIAMETER PLUS ONE INCH.
5. PRECAST MANHOLE SECTIONS AND STEEL REINFORCEMENT SHALL CONFORM TO ASTM C 478, EXCEPT AS MODIFIED.
6. DO NOT PROVIDE MANHOLE STEPS.
7. NO GROUTING SHALL BE PERMITTED ON MANHOLES AND RINGS, EXCEPT THE LIFT HOLES SHALL BE GROUTED.
8. SEWER PIPES SHALL NOT ENTER THE MANHOLE AT A SECTION JOINT.
9. THE VERTICAL PIPE AND REQUIRED FITTINGS SHALL BE THE SAME SIZE AS THE INCOMING SEWER PIPE.
10. THE MINIMUM ANGLE FOR FLOWLINES WITHIN THE MANHOLE SHALL BE 90 DEGREES

CITY OF ROGERSVILLE	STANDARD INSIDE DROP MANHOLE DETAIL NTS	SEW–2	
		DATE 9/1/21	REVISION

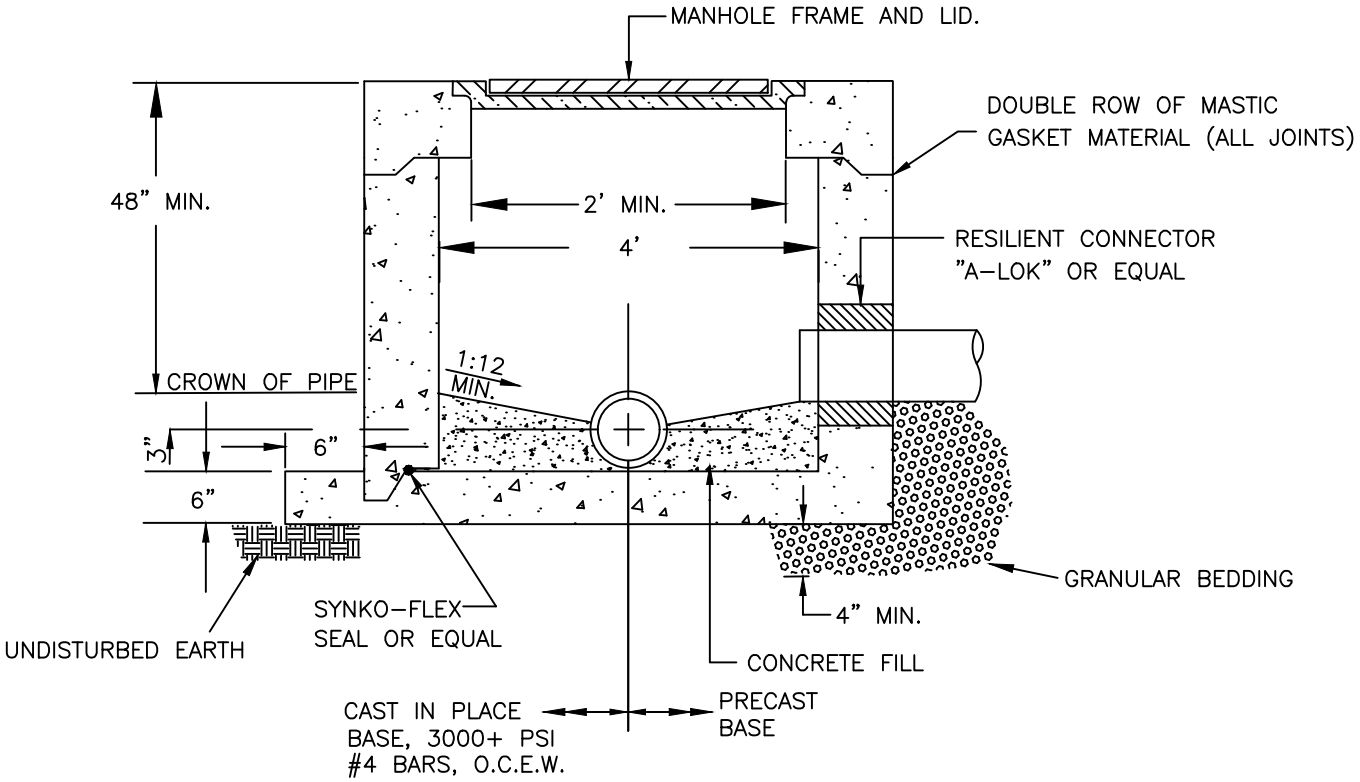

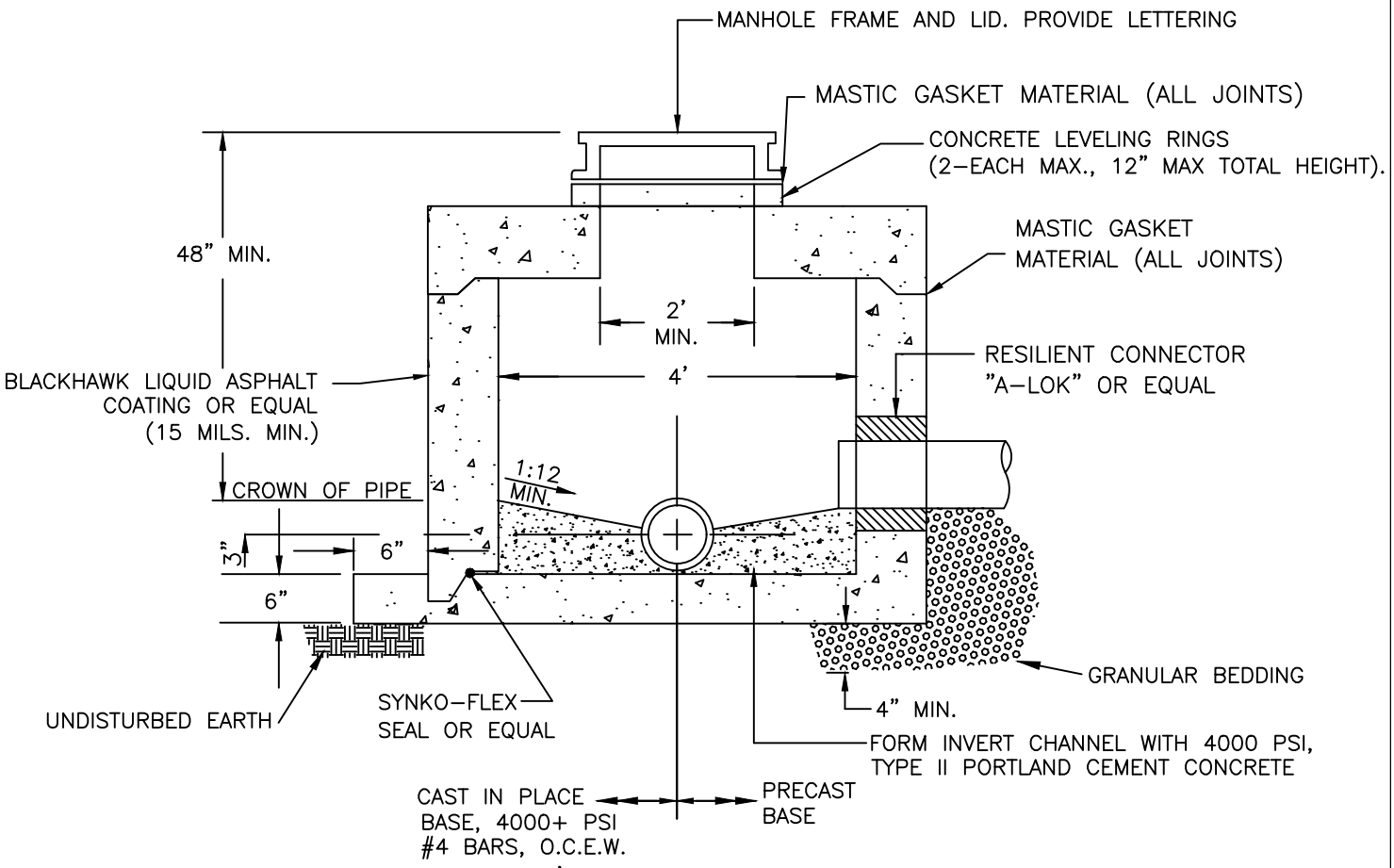

PROVIDE A MIMIMUM DROP OF 0.2' OF INVERT FROM INLET TO OUTLET.

CITY OF ROGERSVILLE	TYPICAL SHALLOW MANHOLES	SEW-3	
	NTS	DATE 9/1/21	REVISION

"D"	PIPE DIAMETER
4'–0"	TO 18"
5'–0"	21" TO 30"
6'–0"	33" TO 42"

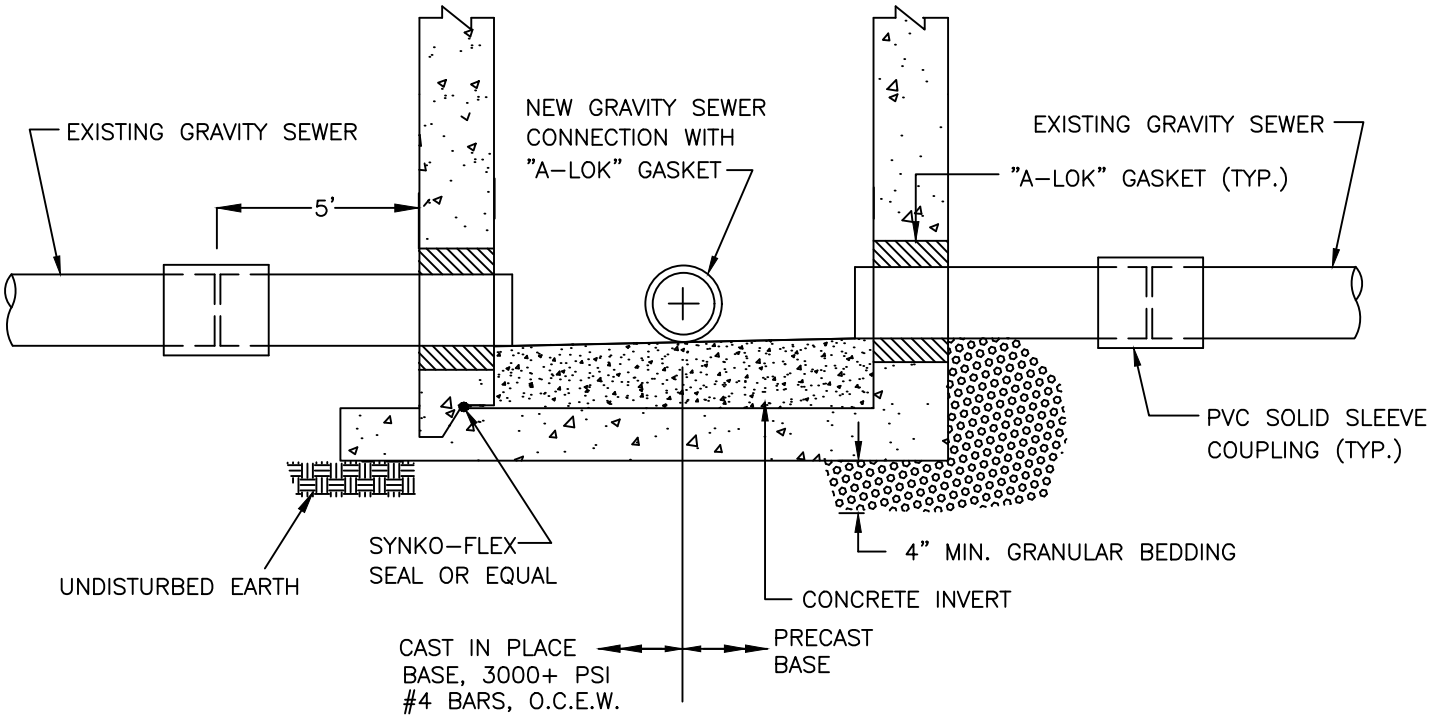

NOTE:

1. USE STANDARD MANHOLE SECTION IN ACCORDANCE WITH DETAIL SEW–1
2. EXISTING GRAVITY SEWER SHALL BE CUT 5' BEYOND LIMIT OF NEW MANHOLE.
3. REMOVE CUT SECTION OF PIPE
4. INSTALL NEW MANHOLE
5. INSTALL NEW CONNECTION SEWER PIPE AND SOLID SLEEVE COUPLINGS.
6. INSTALL NEW SEWER BRANCH PIPING.

CITY OF ROGERSVILLE	NEW MANHOLE ON EXISTING LINE NTS	SEW–4	
		DATE 9/1/21	REVISION

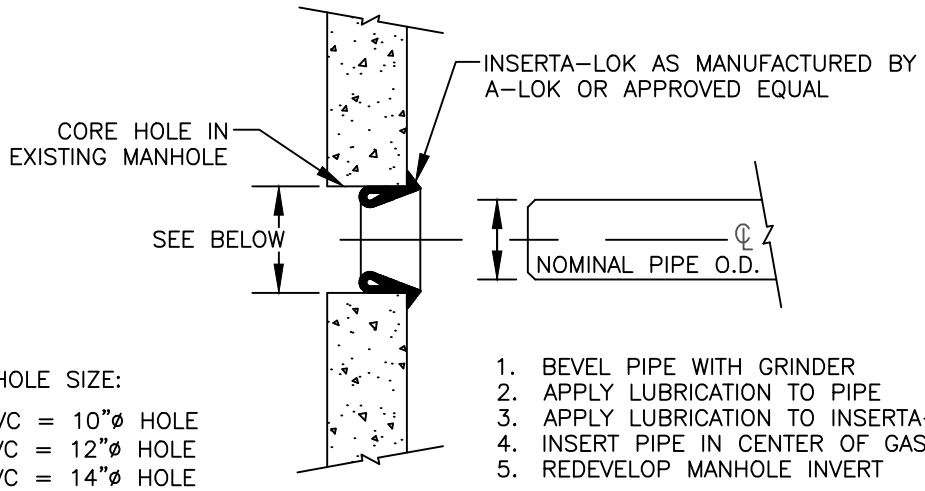

CORE HOLE SIZE:

8"ø PVC = 10"ø HOLE
10"ø PVC = 12"ø HOLE
12"ø PVC = 14"ø HOLE

1. BEVEL PIPE WITH GRINDER
2. APPLY LUBRICATION TO PIPE
3. APPLY LUBRICATION TO INSERTA–LOK GASKET
4. INSERT PIPE IN CENTER OF GASKET
5. REDEVELOP MANHOLE INVERT

CITY OF ROGERSVILLE	CONNECTION TO EXIST MH DETAIL NTS	SEW–5	
		DATE 9/1/21	REVISION 0

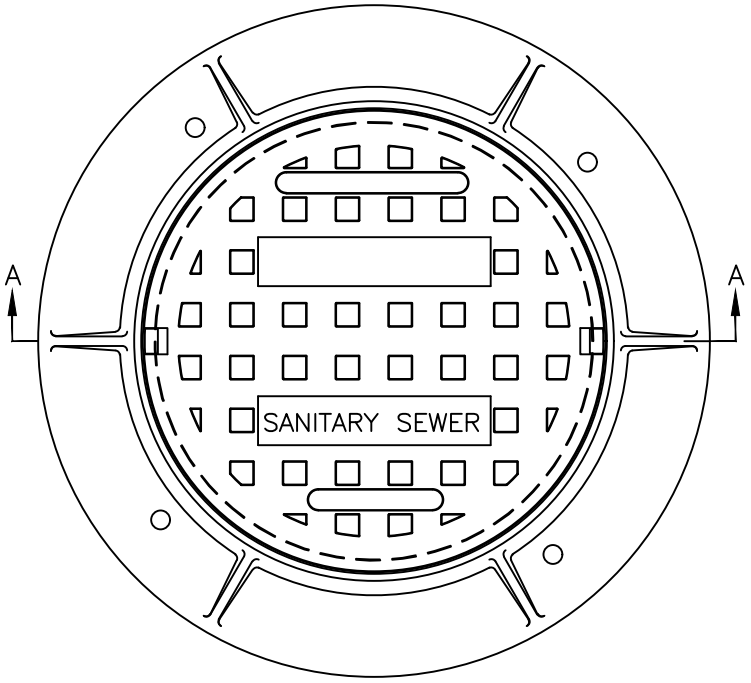

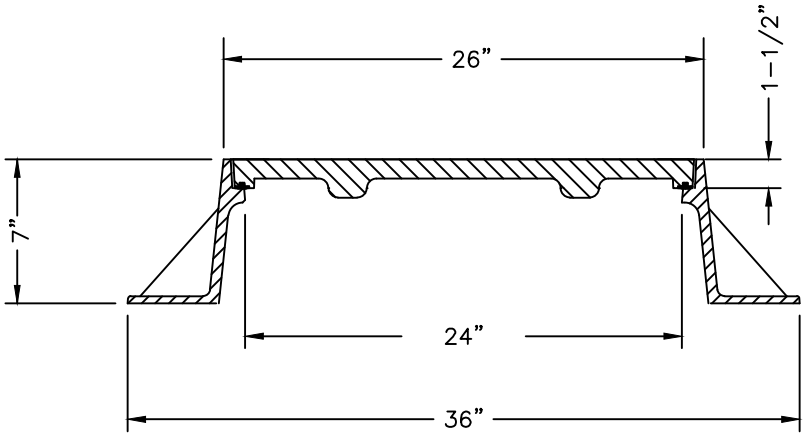

SECTION A–A

NOTES;

1. TYPE A MANHOLE FRAME AND COVER FOR GENERAL USE.
2. PROVIDE SELF–SEALING CONCEALED PICKHOLE TYPE LID, DEETER 1247, NEENAH R–1642, OR CLAY AND BAILEY 3210.
3. COVER AND FRAME SHALL BE CAST GRAY IRON CONFORMING TO THE REQUIREMENTS OF ASTM A 48, CLASS 35B WITH NO PAINT.
4. CASTINGS SHALL BE MANUFACTURED TRUE TO PATTERN AND COMPONENT PARTS SHALL FIT TOGETHER IN A SATISFACTORY MANNER.
5. FRAMES AND COVERS SHALL BE FURNISHED WITH MACHINED HORIZONTAL BEARING SURFACES.
6. FRAMES SHALL BE CIRCULAR, AND THE FLANGE SHALL INCORPORATE 4 EACH 1" DIAMETER BOLT HOLES.

CITY OF ROGERSVILLE	TYPE A MANHOLE FRAME AND LID	SEW–6	
	NTS	DATE 9/1/21	REVISION

MANHOLE COVER AND FRAME
BOLT–DOWN TYPE

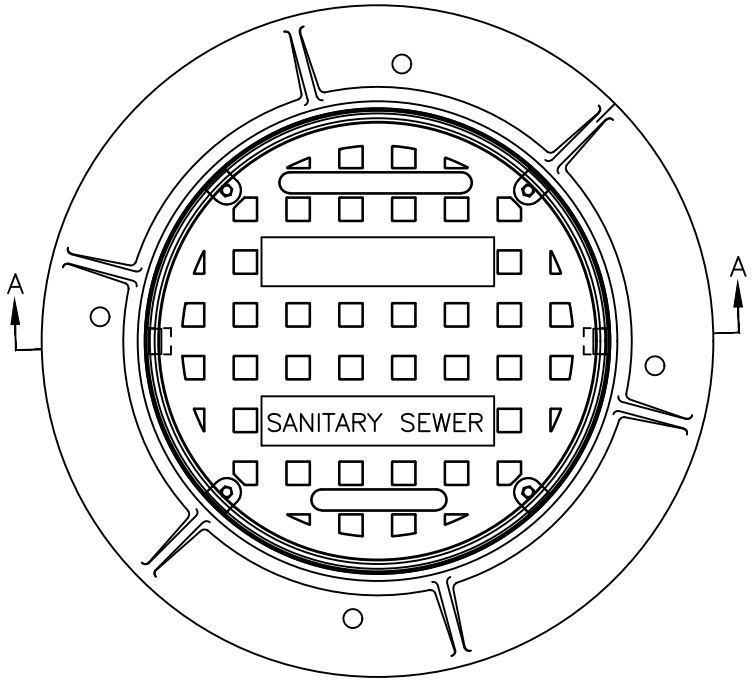

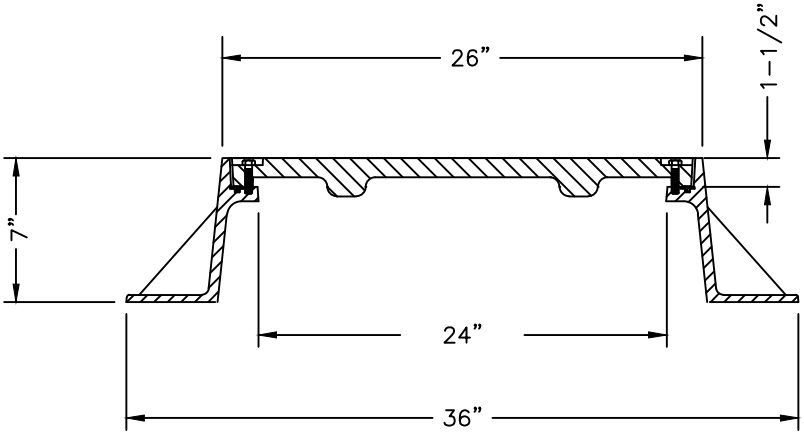

SECTION A–A

NOTES;

1. TYPE B MANHOLE FRAME AND COVER FOR AREAS SUBJECT TO FLOODING OR WHERE BOLT–DOWN COVERS ARE REQUIRED BY THE CITY SHALL BE DEETER 1247B, NEENAH R–1916–F OR CLAY AND BAILEY 20140R.
2. COVER AND FRAME SHALL BE CAST GRAY IRON CONFORMING TO THE REQUIREMENTS OF ASTM A 48, CLASS 35B WITH NO PAINT.
2. COVER AND FRAME SHALL CONFORM TO, H20/HS20 WHEEL LOAD RATING. ALL DIMENSIONS ARE IN INCHES UNLESS NOTED OTHERWISE.
3. CASTINGS SHALL BE MANUFACTURED TRUE TO PATTERN AND COMPONENT PARTS SHALL FIT TOGETHER IN A SATISFACTORY MANNER.
4. FRAMES AND COVERS SHALL BE FURNISHED WITH MACHINED HORIZONTAL BEARING SURFACES.
5. COVERS SHALL HAVE A SELF SEALING GASKET AND SHALL BE FASTENED TO THE FRAME BY A MINIMUM OF FOUR STAINLESS STEEL BOLTS.
6. FRAMES SHALL BE CIRCULAR, AND THE FLANGE SHALL INCORPORATE 4–EACH 1” DIAMETER BOLT HOLES.

CITY OF ROGERSVILLE	TYPE B MANHOLE FRAME AND LID	SEW–7	
	NTS	DATE 9/1/21	REVISION

NOTES;

1. STANDARD "Y" OR "T" CONNECTIONS SHALL BE PLACED AT 45 DEGREE ANGLE.
2. SDR-26 HEAVY WALL TEES SHALL BE USED FOR SDR-26 MAINS AND SDR-21 TEES SHALL BE USED FOR SDR-21 MAINS.
3. WHEN A "T" SADDLE IS USED, IT SHALL BE INSTALLED AT A 45 DEGREE ANGLE.
4. SEWER SERVICE CONNECTIONS INSTALLED SUB-SEQUENTIALLY TO THE MAIN SHALL BE ACCOMPLISHED BY SADDLE TYPE FITTINGS. THE FITTINGS SHALL BE SUPPORTED BY FLOWABLE FILL. COMPLETELY ENCASE THE FITTING TO A MINIMUM OF 1' ABOVE THE POINT OF CONNECTION TO THE MAIN.
5. WHEN TAPPING THE MAIN, DO NOT ALLOW BEDDING MATERIAL OR BORED PLUGS TO FALL INTO MAIN.
6. SERVICE LINES SHALL BE SCHEDULE 40 PVC. JOINTS SHALL BE GLUED WITH AN APPROVED ADHESIVE.
7. COORDINATE DEPTH OF SERVICE LINES AS REQUIRED TO SERVICE THE FACILITY AND TO AVOID OTHER UTILITIES.
8. SEWER SERVICES SHALL NOT BE INSTALLED WITHIN 5' OF A MANHOLE EXTERIOR WALL AND SHALL BE SEPARATED BY A 5' MININMUM SPACING..
9. SEWER SERVICE SHALL BE PROVIDE TO EVERY BUILDABLE PLATED LOT WITHIN A SUBDIVISION.
10. THE MAXIMUM NUMBER OF UNITS TO BE CONNECTED ON A 4" SEWER SERVICE SHALL BE ONE FOR EACH SINGLE FAMILY STRUCTURE.
11. SEWER LATERAL SHALL EXTEND TO PROPERTY LINE AS A MINIMUM.
12. TRACER WIRE SHALL BE PROVIDED FOR EVERY SEWER LATERAL AND SHALL BE #12 AWG COPPER CLAD STEEL, (HS-CCS). CORROSION PROOF/FILLED WIRE CONNECTORS SHALL BE USED AT SPLICE LOCATIONS.

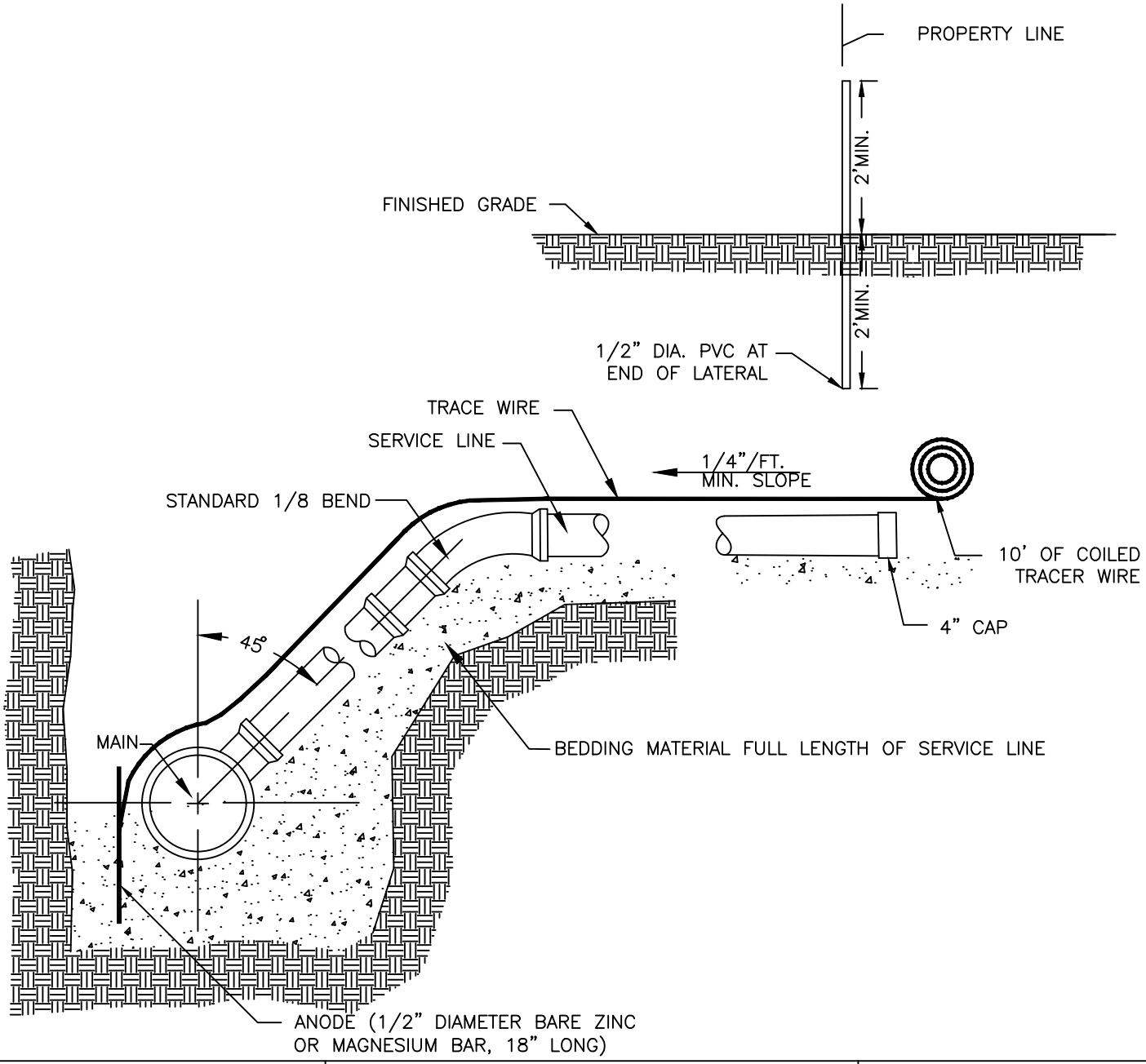

CITY OF ROGERSVILLE	STANDARD SEWER SERVICE DETAIL ANODE NTS	SEW-8	
		DATE 9/1/21	REVISION

CITY OF ROGERSVILLE

GREASE INTERCEPTOR DETAIL

NTS

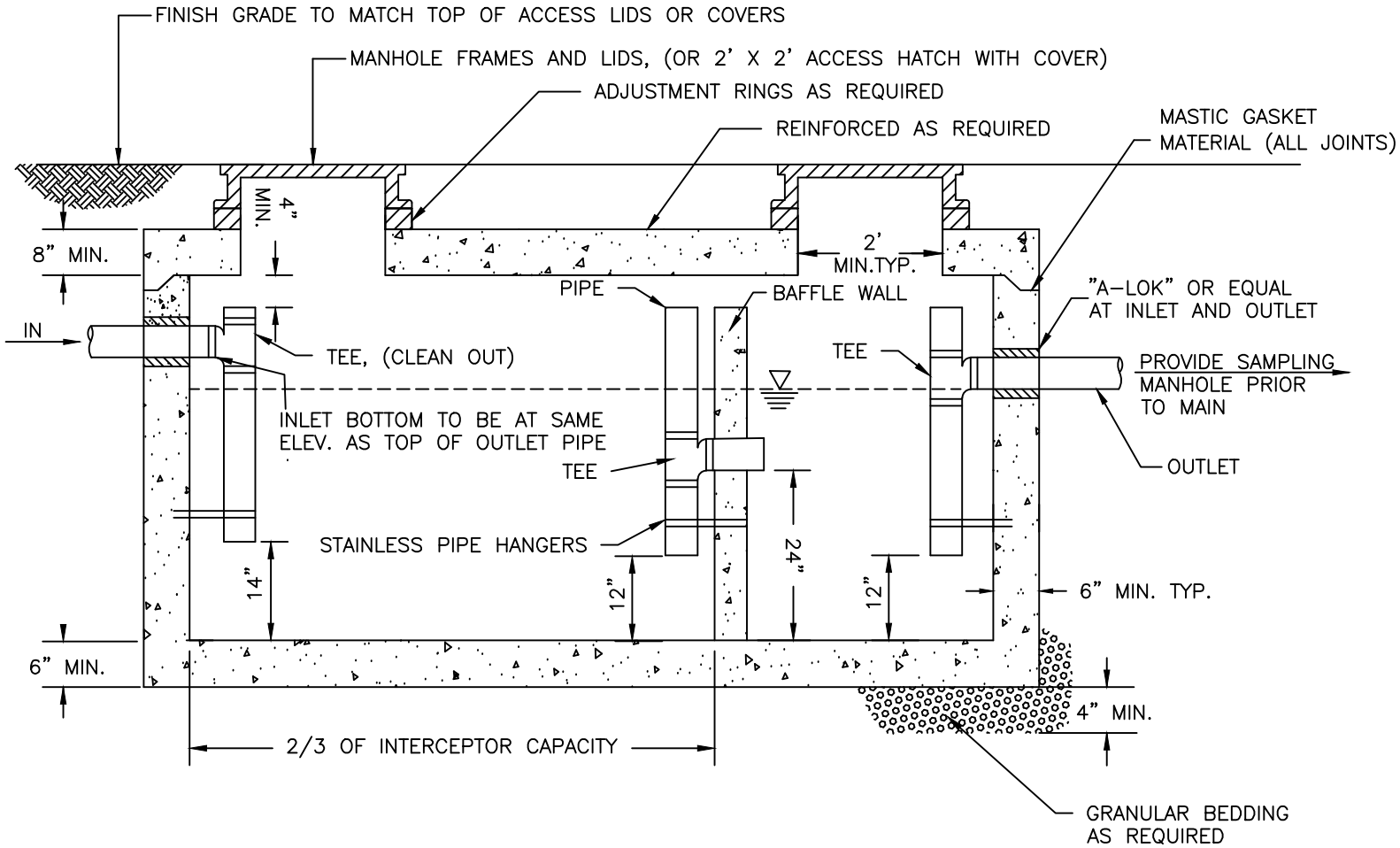

NOTES;

1. ALTERNATIVE CONFIGURATIONS OF GREASE INTERCEPTOR MAY BE SUBMITTED TO THE CITY FOR CONSIDERATION.
2. THE GREASE INTERCEPTOR SHALL BE ADEQUATELY SIZED TO ALLOW SUFFICIENT RETENTION TIME FOR SEPARATION AND SETTLING AS WELL AS SUFFICIENT STORAGE CAPACITY.
3. PROVIDE APPROPRIATE LIFT ANCHORS.
4. CLEAN OUTS SHALL BE PROVIDED ON THE INLET AND OUTLET PIPES OUTSIDE OF THE INTERCEPTOR.
5. THE LIQUID DEPTH SHALL BE 72 INCHES MAXIMUM.
6. THE TANK LENGTH SHALL BE GREATER THAN THE TANK WIDTH.
7. REFER TO ASTM C 1613, STANDARD SPECIFICATIONS FOR PRECAST CONCRETE GREASE INTERCEPTOR TANKS.
8. TANKS SHALL BE CONSTRUCTED IN ACCORDANCE WITH ASTM C890, STANDARD PRACTICE FOR MINIMUM STRUCTURAL DESIGN LOADING.
9. TANK AND ALL APPURTENANCES TO BE FABRICATED AND ASSEMBLED AT MANUFACTURING PLANT.
10. PROVIDE TNEMEC SERIES 141 OR SHERWIN-WILLIAMS TANK CLAD HS CORROSION RESISTANT EPOXY COATING FOR ALL INTERIOR SURFACES.

DATE 9/1/21

SEW-9

REVISION

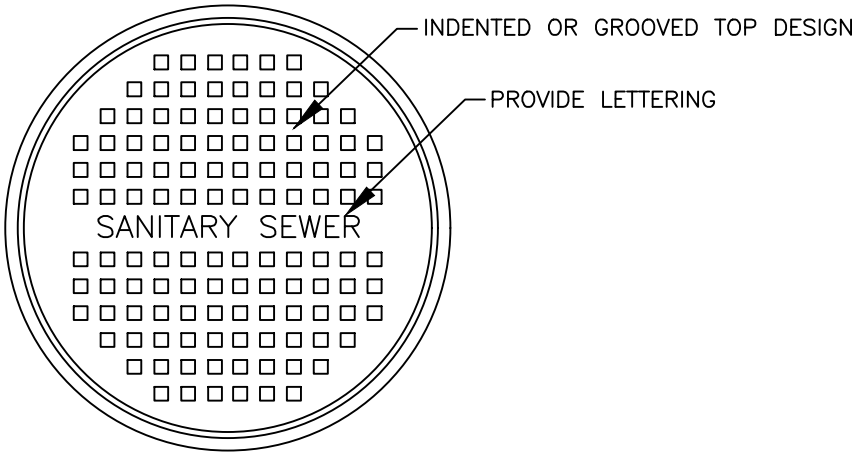

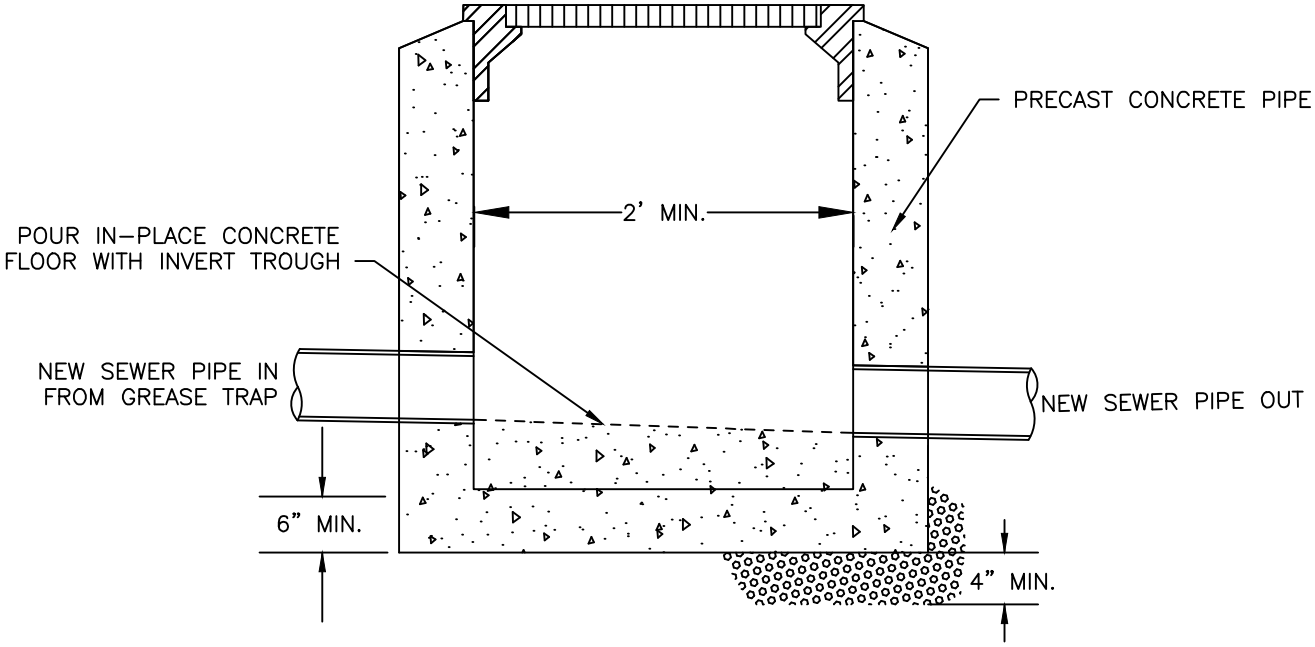

NOTES:

1. MANHOLES SHALL BE STANDARD REINFORCED CONCRETE PIPE SECTION, 2' MIN. DIA. X 3' MIN. DEPTH.
2. MANHOLE FLOOR SHALL BE POURED IN PLACE CONCRETE.
3. FRAME AND LID SHALL BE NEENAH SLAB TYPE R-5900-E OR APPROVED EQUAL AND SHALL BE TRAFFIC RATED WHEN APPLICABLE.
4. SEALANT SHALL BE APPLIED UNDER ENTIRE PORTION OF THE FRAME AND AT ALL CONCRETE PIPE JOINTS.
5. OPENINGS FOR INFLUENT AND EFFLUENT PIPES TO BE CORED WITHOUT BREAKING.
6. USE "INSERTA-LOK" OR APPROVED EQUAL FOR PIPE CONNECTIONS TO MANHOLE.

CITY OF ROGERSVILLE	SAMPLING MANHOLE DETAIL NTS	SEW-10	
		DATE 9/1/21	REVISION

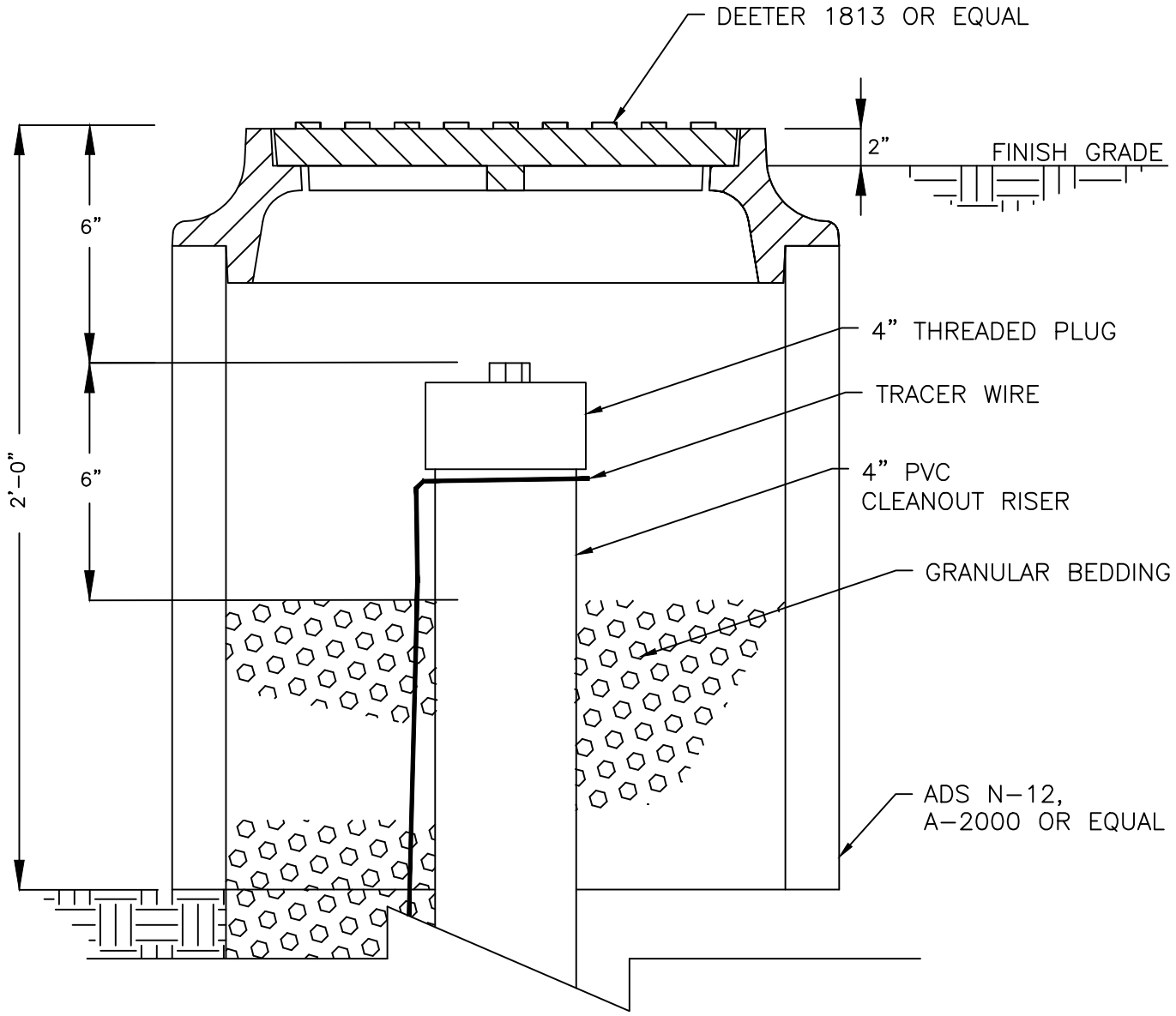

CITY OF ROGERSVILLE	CLEANOUT RISER DETAIL NTS	SEW-11	
		DATE 9/1/21	REVISION

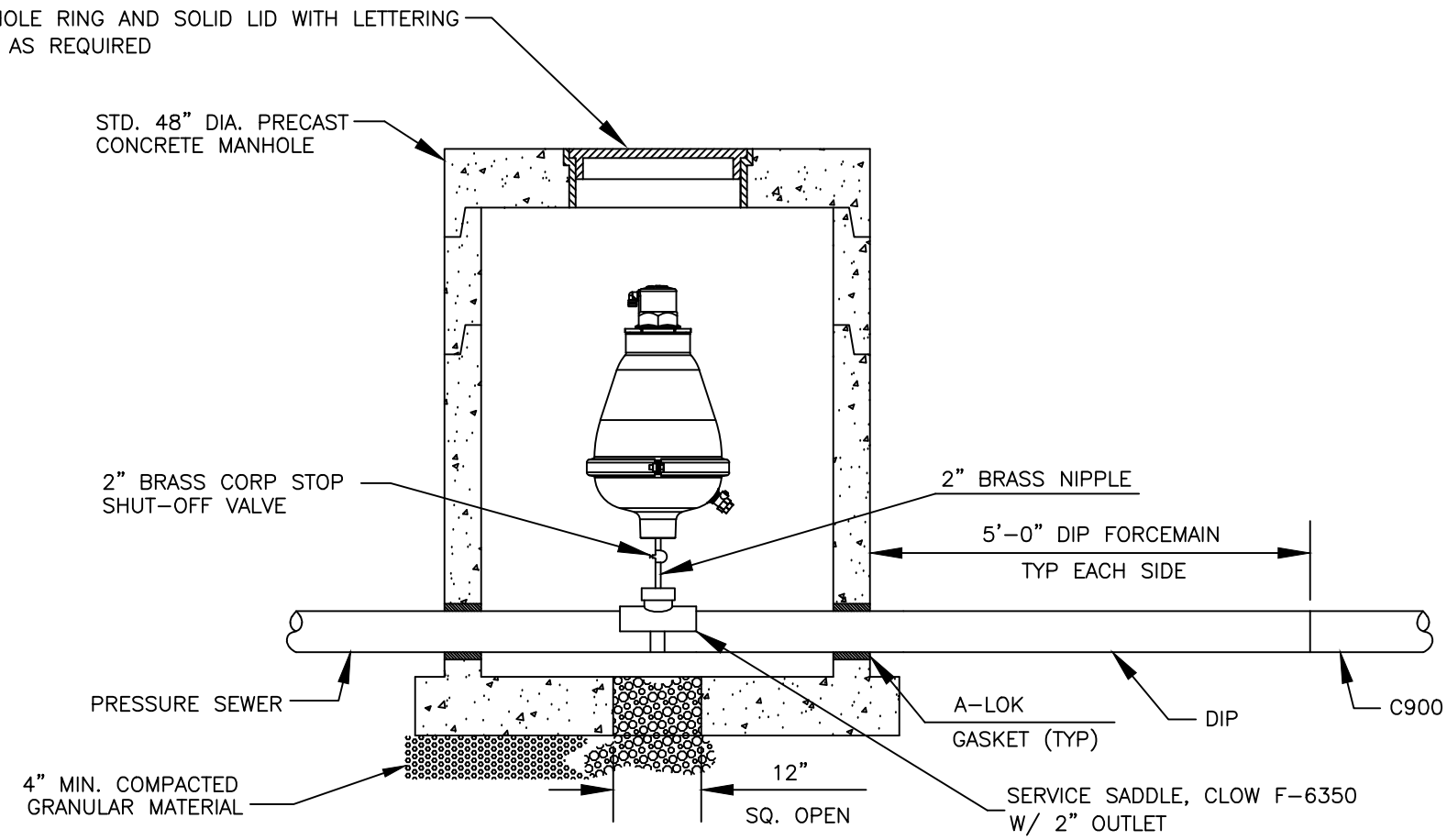

NOTES:

1. PROVIDE CL 50 DUCTILE IRON PIPE TO A POINT 5' OUTSIDE OF MANHOLE BOTH SIDES.
2. SEWAGE COMBINATION AIR & VACUUM VALVE COMPLETE W/ACCESSORIES FOR FLUSHING SHALL BE A 2" ARI S-025 AUTOMATIC AIR RELEASE VALVE OR APPROVED EQUAL.
3. PROVIDE TRACER WIRE ON TOP OF SEWER MAIN AND ACCESS BOXES AT 500' MAXIMUM SPACING.
4. VAULT SHALL BE STANDARD PRECAST SHALLOW TYPE MANHOLE. SEE SHALLOW MANHOLE DETAILS.
5. PLACED AT HIGH SPOT.

CITY OF ROGERSVILLE

AIR RELIEF VALVE

NTS

DATE 9/1/21

REVISION

SEW-12

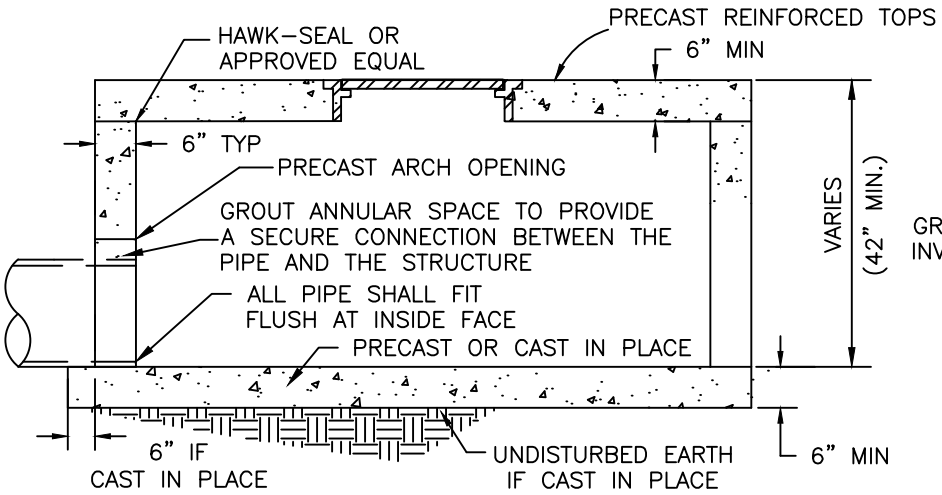

SECTION A–A

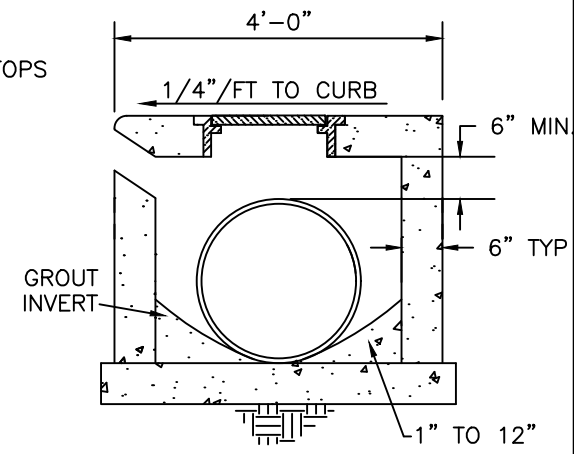

SECTION B–B

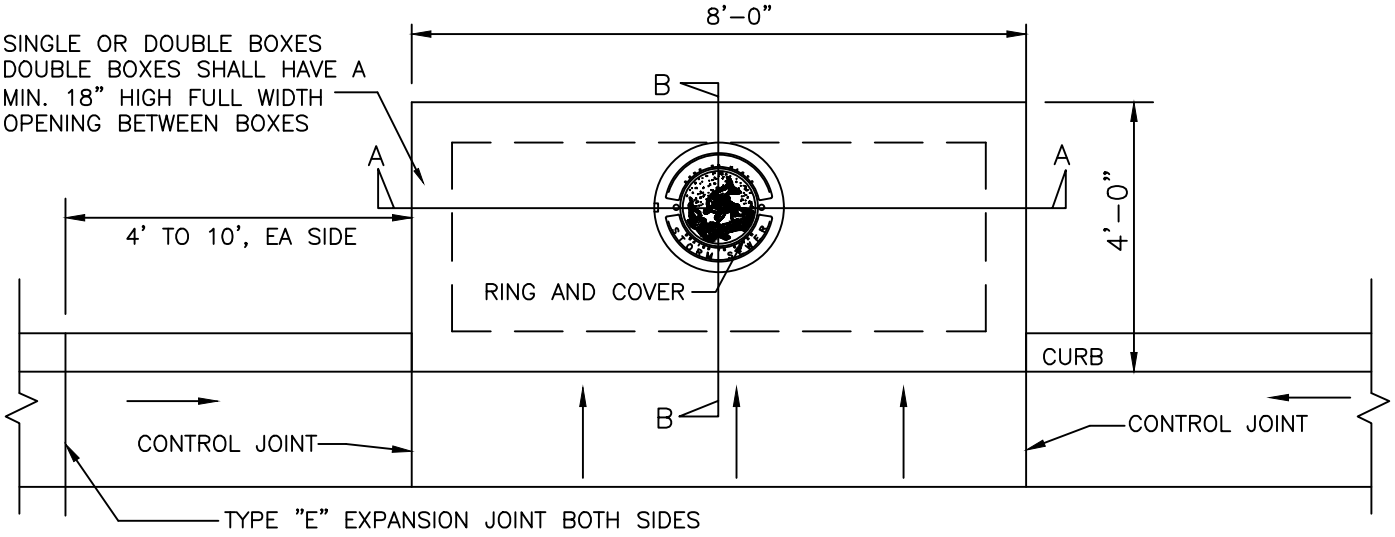

PLAN

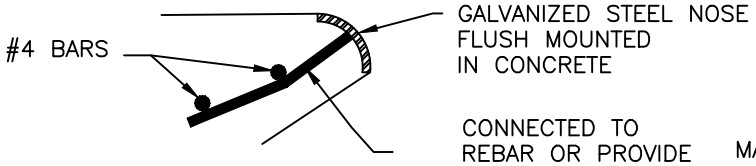

ANGLE IRON DETAIL

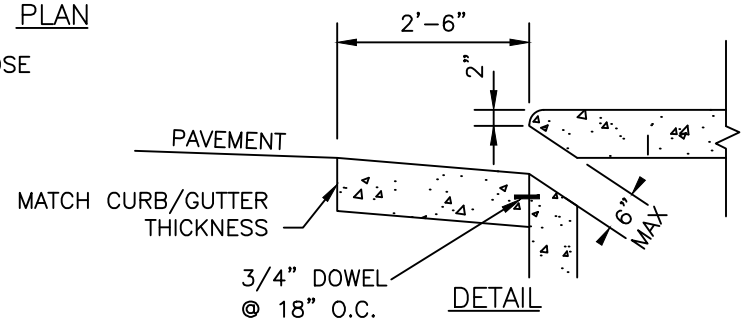

DETAIL

NOTES;

1. THE BOTTOM SLAB SHALL BE CAST IN PLACE CONCRETE ON UNDISTURBED EARTH OR PRECAST CONCRETE ON 4" MINIMUM THICKNESS OF GRANULAR BEDDING.
2. PROVIDE APPROPRIATE FLOW PROFILE THRU BOX INVERT.
3. ALL PIPES SHALL FIT FLUSH AT INSIDE FACE OF INLET.
4. FORM INVERT CHANNEL WITH 4000 PSI, TYPE II PORTLAND CEMENT CONCRETE.
5. PROVIDE #4 BARS @ 10" O.C.E.W. FOR ALL WALLS, (VERT., HORIZ. AND SLAB). SEE TOP SLAB REINFORCEMENT DETAIL.
6. CONCRETE TOP SLAB SHALL BE PINNED TO THE STRUCTURE AT EACH CORNER WITH ONE #4 DEFORMED BAR EXTENDED A MINIMUM OF 6" INTO RISER BELOW.
7. THE TOP AND OPENING SHALL MATCH PROFILE OF ADJACENT CURB LINE.
8. PROVIDE MASTIC GASKET FOR ALL JOINTS.
9. THE MAXIMUM PIPE SIZE FOR THE 4' WALL LENGTH SHALL BE 24".
10. IF INLET IS NOT RECESSED THEN A PROTECTIVE GALVANIZED STEEL NOSE IS REQUIRED AS SHOWN.

CITY OF ROGERSVILLE	CURB INLETS DETAIL	STM-1	
	NTS	DATE 9/1/21	REVISION

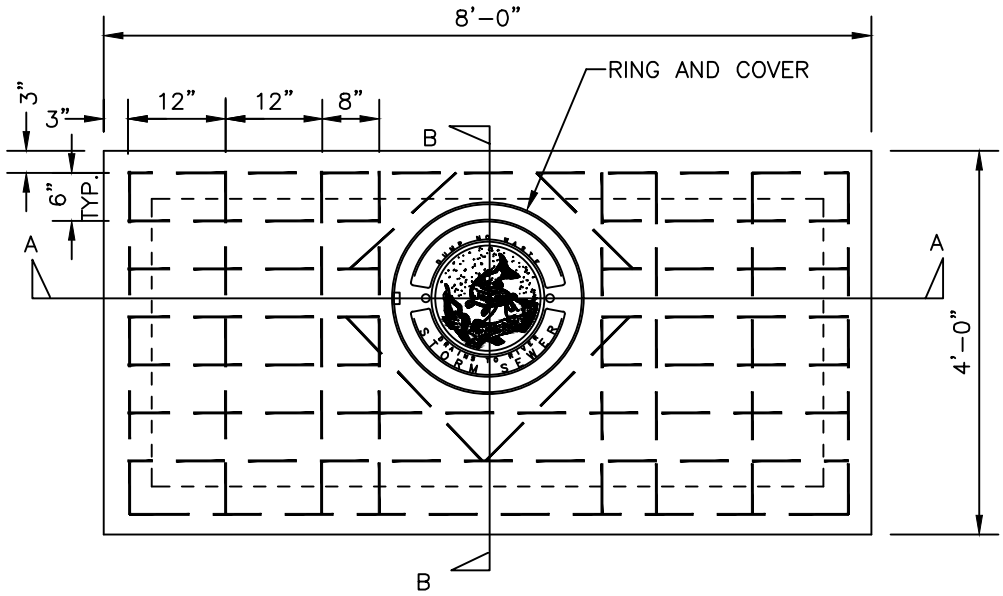

PLAN

NOTES;

1. USE NO. 4 BARS THROUGHOUT.
2. REINFORCEMENT IS THE SAME IN THE TOP SLAB OF THE 6" AND THE 18" PRECAST TOP.
3. ALL 6" PRECAST TOPS SHALL BE PINNED AT ALL 4 CORNERS WITH #4 DOWELS EXTENDED A MINIMUM OF 6" INTO RISER BELOW..
4. IF INLET IS NOT RECESSED THEN A PROTECTIVE GALVANIZED STEEL NOSE IS REQUIRED AS SHOWN

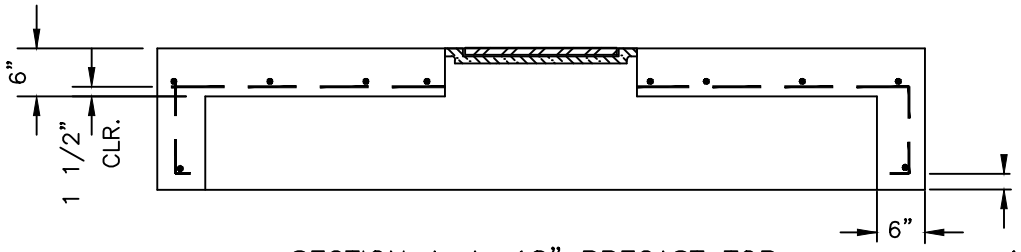

SECTION A–A, 18" PRECAST TOP

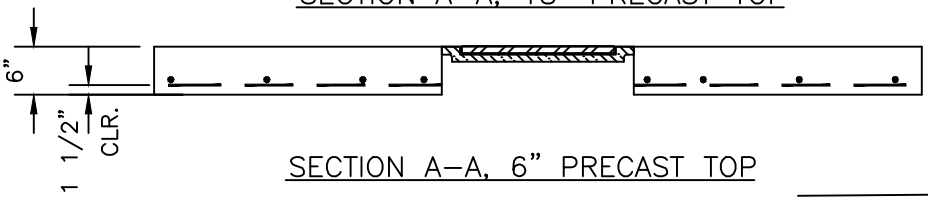

SECTION A–A, 6" PRECAST TOP

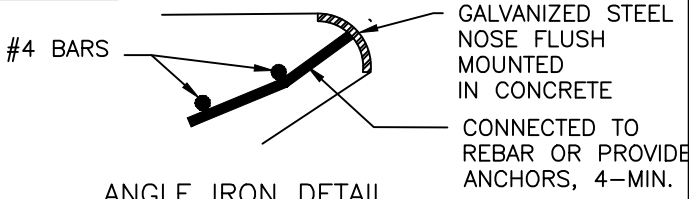

ANGLE IRON DETAIL

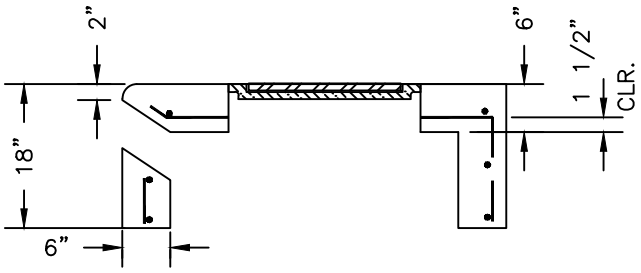

SECTION B–B 18" PRECAST TOP

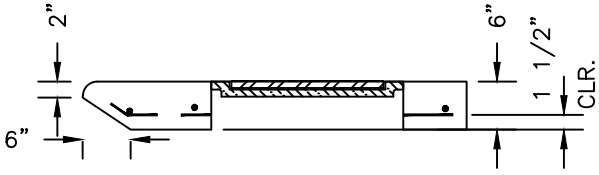

SECTION B–B 6" PRECAST TOP

CITY OF ROGERSVILLE	TOP SLAB REINFORCEMENT NTS	STM–2	
		DATE 9/1/21	REVISION

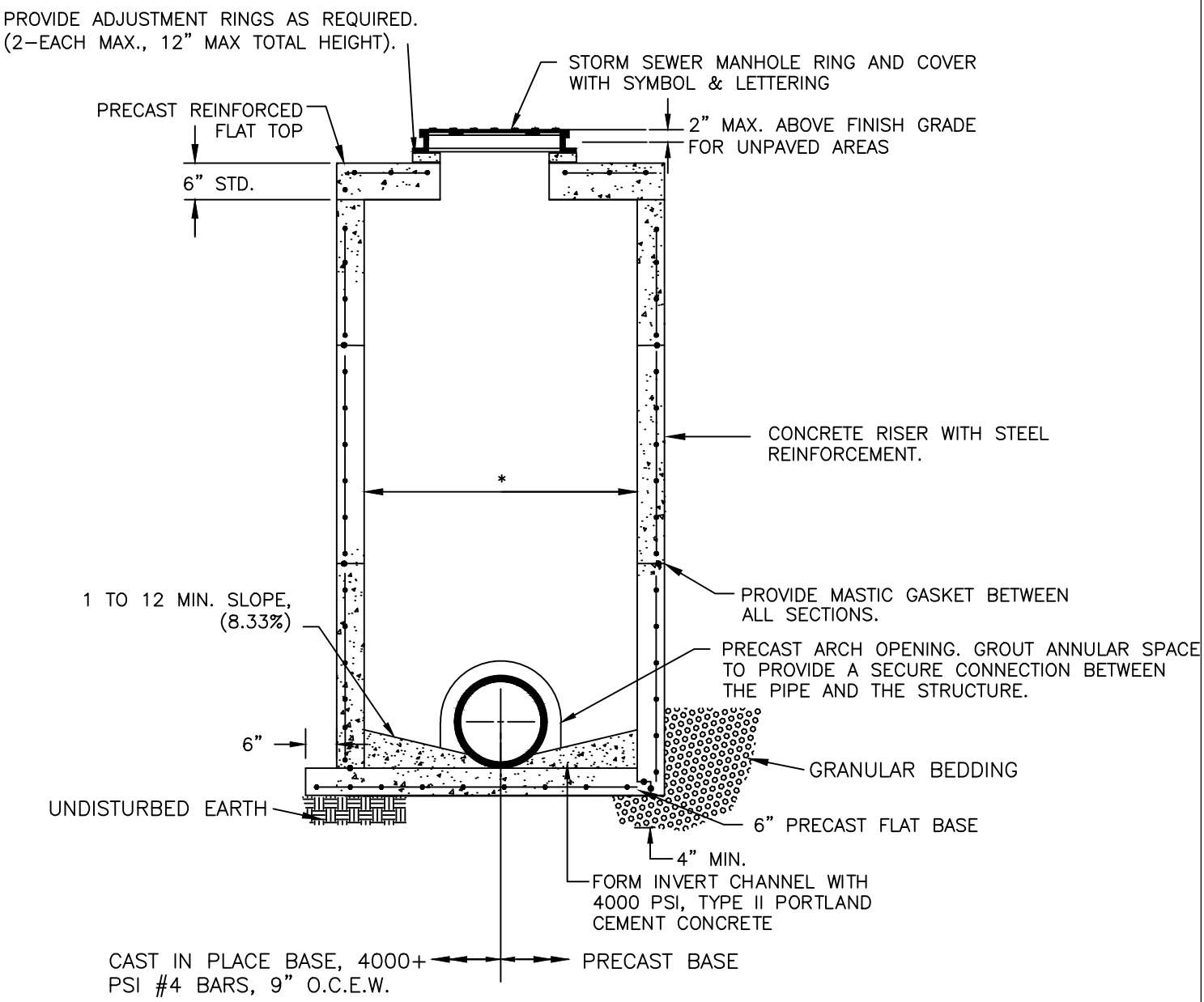

NOTES;

1. THE BOTTOM SLAB SHALL BE CAST IN PLACE CONCRETE ON UNDISTURBED EARTH OR PRECAST CONCRETE ON 4" MINIMUM THICKNESS OF COMPACTED GRANULAR BEDDING.
2. JUNCTION BOX SHALL BE DESIGNED TO WITHSTAND DEAD LOADS AND TRAFFIC LOADS IN ACCORDANCE WITH ASTM C890.
3. CONCRETE TOP SLAB SHALL BE PINNED TO THE STRUCTURE AT EACH CORNER WITH ONE #4 DEFORMED BAR EXTENDED A MINIMUM OF 6" INTO RISER BELOW.
4. PROVIDE APPROPRIATE FLOW PROFILE THRU INVERT.
5. ALL PIPES SHALL FIT FLUSH WITH INSIDE FACE OF JUNCTION BOX.
6. DO NOT PROVIDE STEPS.
7. THE CIRCULAR PRECAST SECTIONS AND STEEL REINFORCEMENT SHALL BE IN ACCORDANCE WITH ASTM C478.

PIPE DIAMETER	*MINIMUM INSIDE DIMENSION OF STRUCTURE
15"–24"	FOUR FEET (4')
27"–42"	FIVE FEET (5')
48"–54"	SIX FEET (6')
54"–66"	EIGHT FEET (8')
>66"	SPECIAL JUNCTION STRUCTURE

CITY OF ROGERSVILLE	STANDARD JUNCTION BOX & STORM MANHOLE DETAIL NTS	STM–3	
		DATE 9/1/21	REVISION

NOTES:

1. DEETER 1157 MANHOLE RING AND SOLID COVER OR APPROVED EQUAL.
2. COVERS WITH A SIMILIAR SYMBOL MAY BE SUBMITTED FOR APPROVAL
3. ALL DIMENSIONS ARE IN INCHES UNLESS OTHERWISE NOTED .

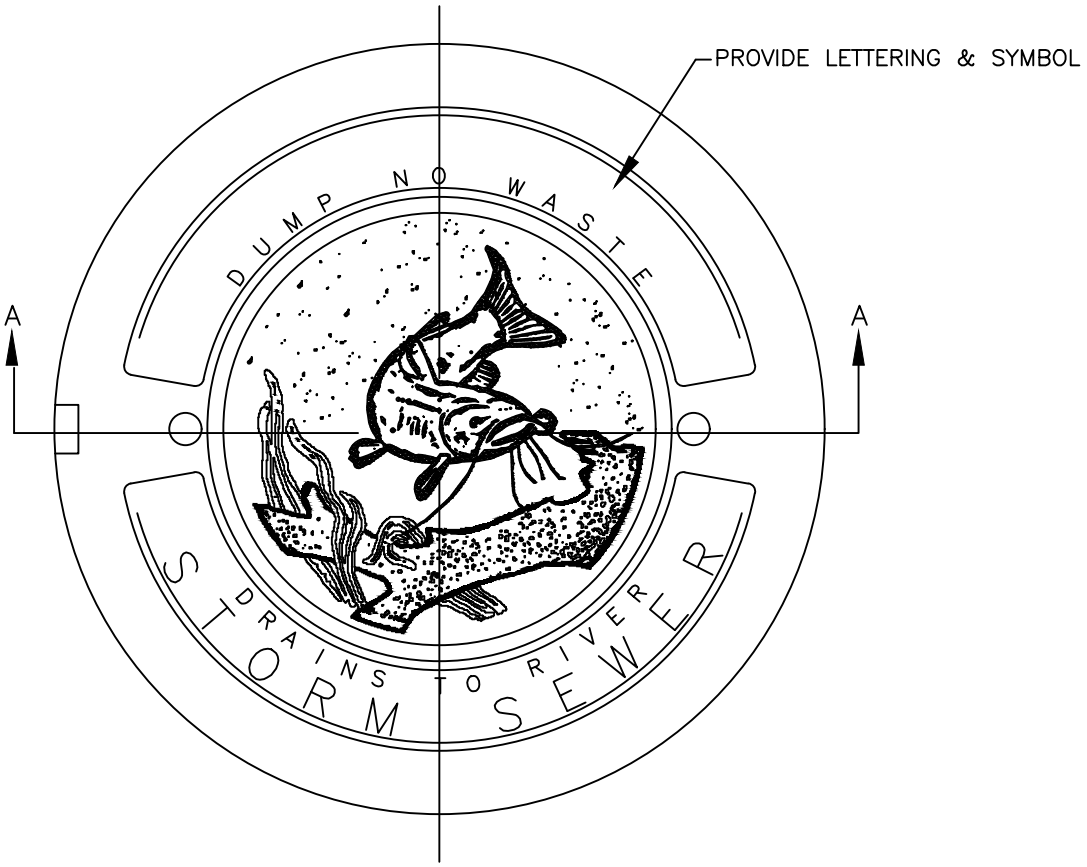

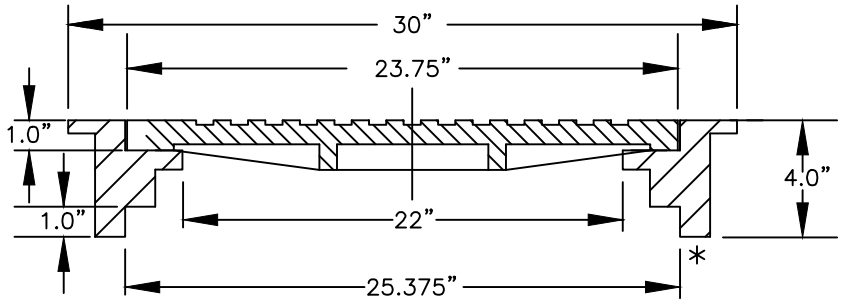

*MANHOLE RING IS REVERSIBLE

SECTION A–A

CITY OF ROGERSVILLE	RING AND COVER FOR STORM INLET, STORM MANHOLE & JUNCTION BOX NTS	STM–4	
		DATE 9/1/21	REVISION

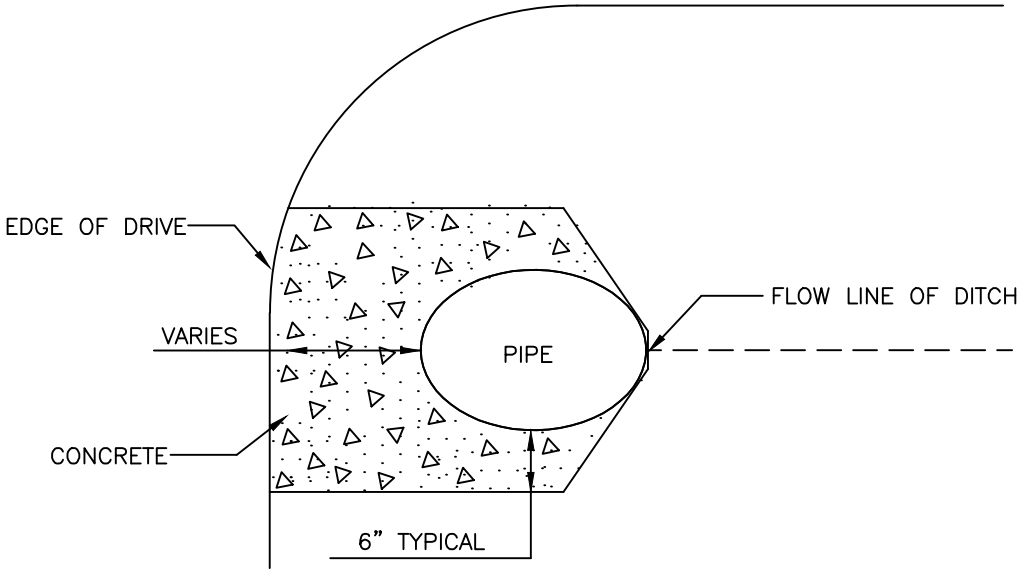

PLAN

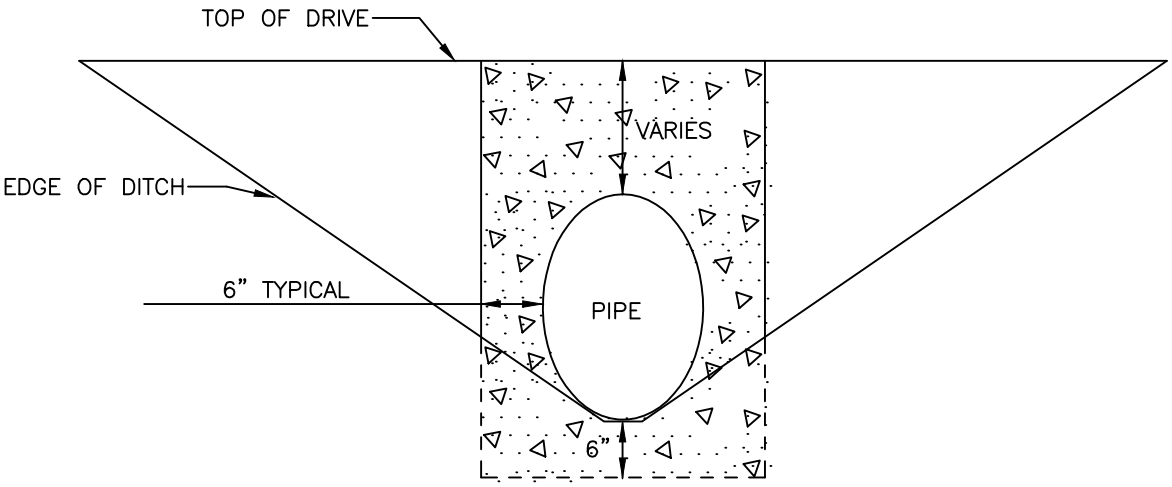

ELEVATION

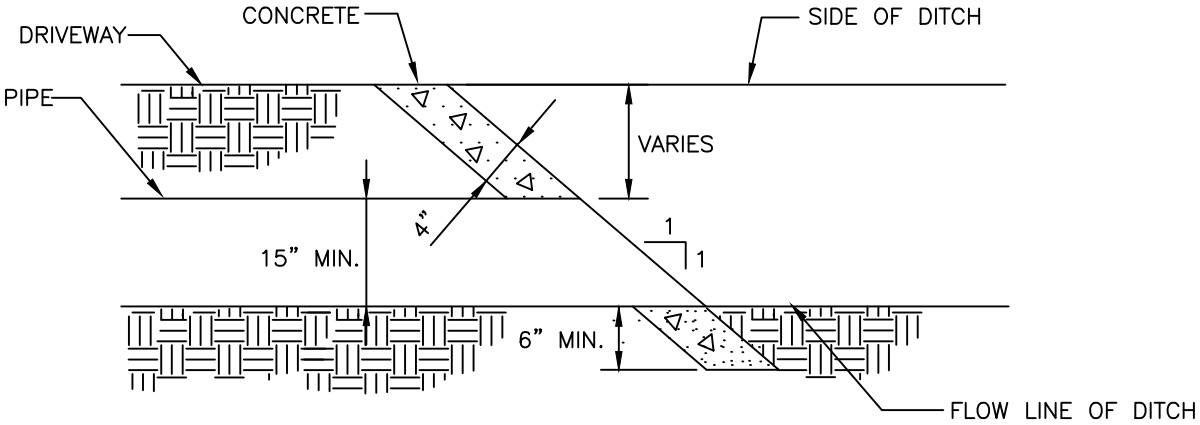

SECTION

FOR DRIVEWAY CROSSINGS AT UNIMPROVED STREETS WITH CORRUGATED OR CONCRETE PIPE.
CUT PIPE AT A BEVEL AND POUR CONCRETE AROUND END TO MEASUREMENTS INDICATED.

CITY OF ROGERSVILLE	CONCRETE CULVERT CAP FOR DRIVEWAYS NTS	STM-5	
		DATE 9/1/21	REVISION

CITY OF ROGERSVILLE

TYPICAL PAVEMENT DETAILS

NTS

DATE 8/1/22

STR-1

REVISION

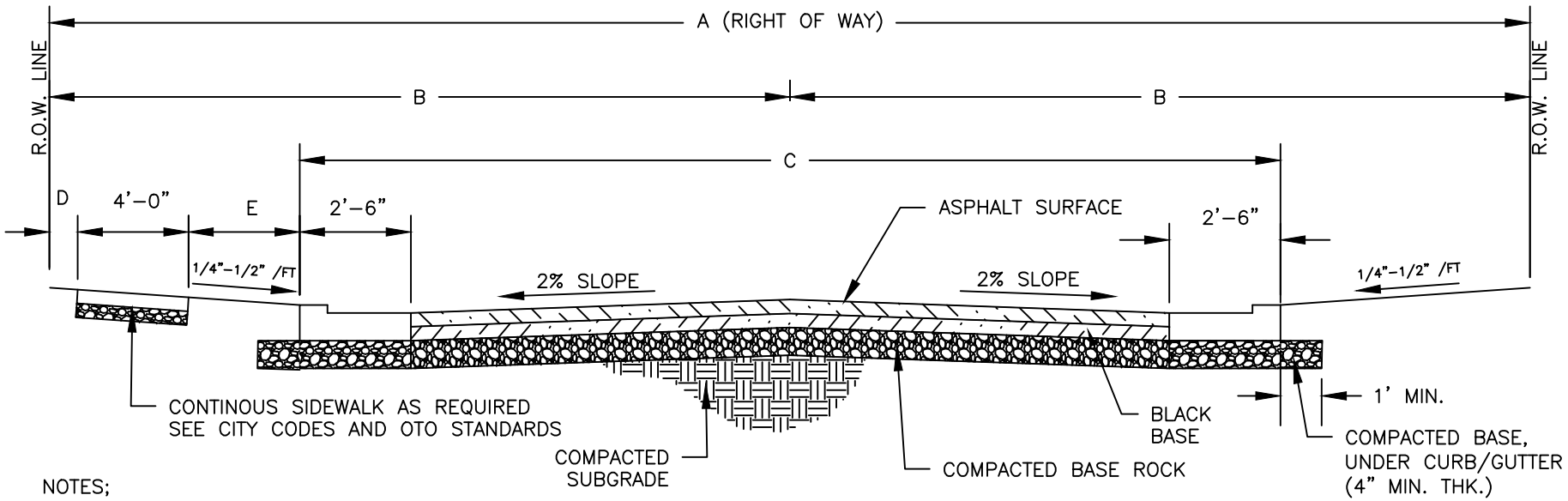

NOTES;

1. THE EARTH SUBGRADE SHALL BE SCARIFY TO A DEPTH OF 8" FOR BOTH CUT AND FILL AREAS, HAVE THE MOISTURE CONTENT ADJUSTED TO A RANGE OF +/- 2% FROM OPTIMUM MOISTURE CONTENT FOR STABILITY AND COMPACTED TO A MINIMUM OF 95% STANDARD PROCTOR DENSITY PER ASTTM D-698.
2. THE AGGREGRATE BASE MATERIAL SHALL BE SPREAD IN 6" MAXIMUM LIFTS WITH MOISTURE APPLIED AS NECESSARY TO OBTAIN A DENSITY OF NOT LESS THAN 95% OF STANDARD MAXIMUM DENSITY AS DETERMINED BY ASTM D-698.
3. BITUMINOUS BASE AND SURFACE SHALL BOTH BE COMPACTED TO A DENSITY OF NOT LESS THAN 95% OF THAT OBTAINED BY THE LABORATORY COMPACTION OF A SPECIMEN OF THE APPROVED MIXTURE.
4. TWO INCHES OF COMPACTED BASE ROCK MAY BE SUBSTITUTED FOR ONE INCH OF BLACK BASE THICKNESS.

STREET CLASSIFICATION	A (R.O.W.)	B	C. PVMT W BOC TO BOC	D	E	BASEROCK (MIN DEPTH)	BITUMINOUS ASPHALT, (MIN. THK.) BLACK BASE	SURFACE	CONCRETE EQUIVALENT
RESIDENTIAL STREETS	50'	25'	28'	1'	6' MIN.	4"	5.5"	1.5"	6"
COLLECTOR	60'	30'	36'	1'	7' MIN.	4"	7"	1.5"	7"
ARTERIAL	70'	35'	44'	1'	8' MIN.	*	*	*	*

*TO BE INDIVIDUALLY DESIGNED.

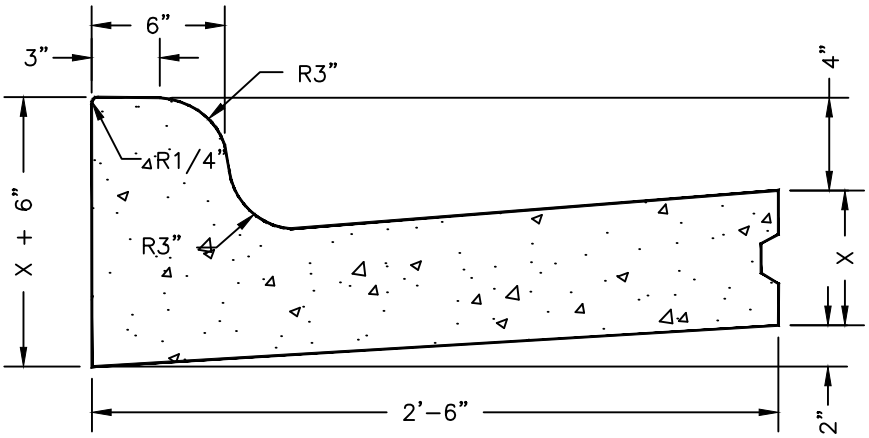

NOTE;

1. X DENOTES THE THICKNESS OF THE PAVEMENT, (ASPHALT OR CONCRETE).

2. PROVIDE THE KEYWAY OR #5 REBAR AT 2'-6" O.C. FOR ALL CONCRETE PAVEMENT. KEYWAY OR REBAR SHALL BE OMITTED FOR ASPHALT PAVEMENT.

3. EXPANSION JOINTS SHALL BE PLACED AT ALL DRIVEWAY RADII AND INTERSECTION RADII, AT INTERVALS OF NOT MORE THAN 200 FEET AND AT THE LOCATIONS INDICATED ON THE STANDARD DRAWINGS. BITUMINOUS PREFORMED EXPANSION JOINTS SHALL BE 3/4 INCH THICK AND PRECUT TO THE EXACT CROSS SECTION OF THE CURB AND GUTTER.

4. CONTRACTION JOINTS SHALL BE SAWED AT INTERVALS NOT GREATER THAN 15 FEET AND AT LOCATIONS INDICATED ON THE STANDARD DRAWINGS. CONTRACTION JOINTS SHALL BE SAWED 1-1/2 INCHES DEEP.

CITY OF ROGERSVILLE	STANDARD CURB DETAILS	NTS	STR-2	
			DATE 8/1/22	REVISION

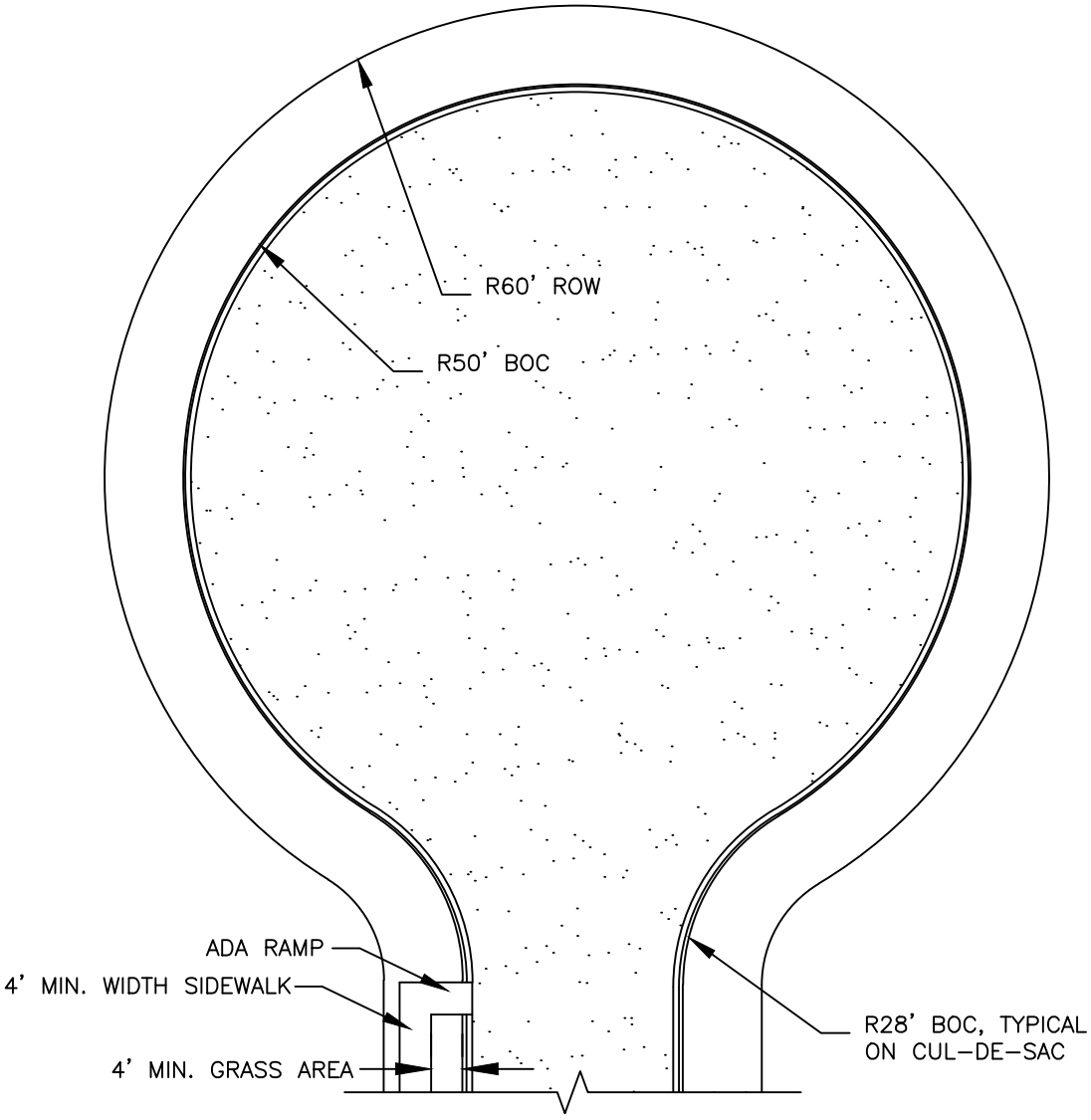

CITY OF ROGERSVILLE	CUL-DE-SAC PLAN MINIMUM STANDARDS NTS	STR-3	
		DATE 9/1/21	REVISION

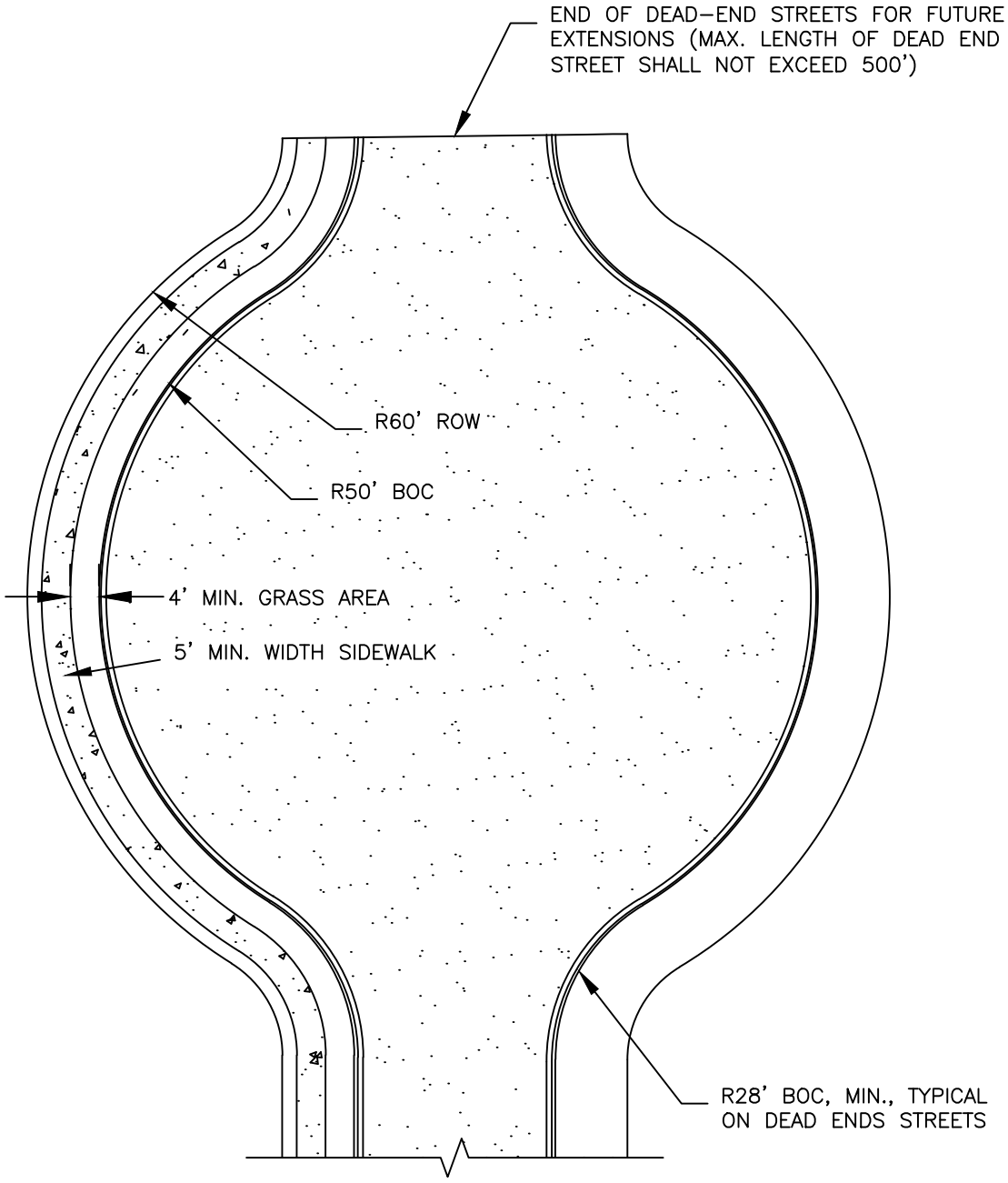

NOTE:
1. AN APPROPRIATE SIZED AND DESIGNED "T" TYPE MAY BE APPROVED ON A CASE BY CASE REQUEST.

CITY OF ROGERSVILLE	TEMPORARY DEAD ENDS MINIMUM STANDARDS NTS	STR-4 DATE 9/1/21	REVISION

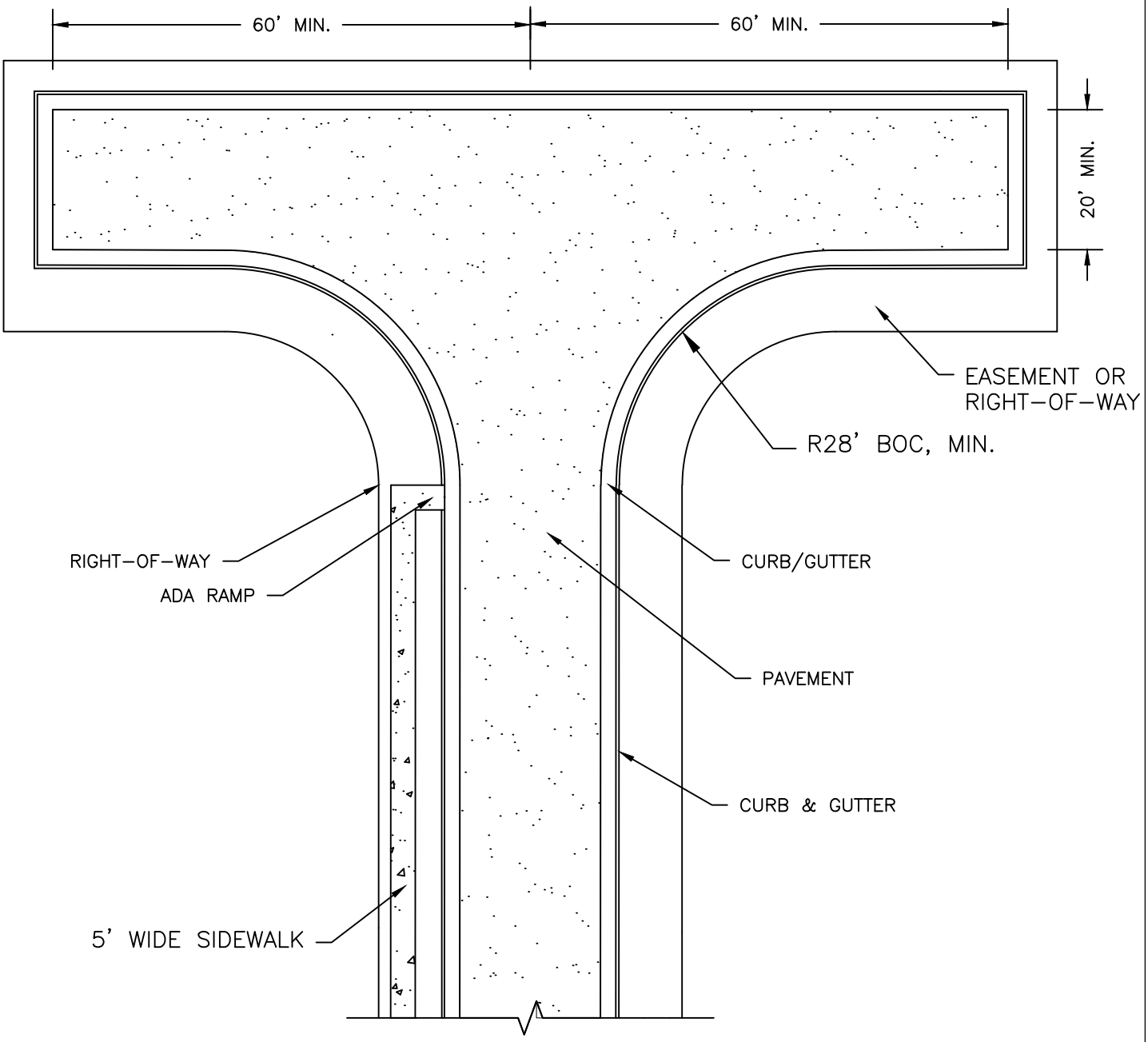

NOTE:

1. A "T" TYPE DEAD-END MAY BE APPROVED FOR A FIRE APPARATUS ACCESS ROAD TURNAROUND ON A CASE BY CASE REQUEST.
2. FIRE APPARATUS ACCESS ROADS SHALL NOT EXCEED 10 PERCENT IN GRADE WITHOUT APPROVAL FROM THE FIRE CHIEF.
3. PROVIDE APPROPRIATE STORM DRAINAGE.
4. LENGTH OF DEAD END STREETS SHALL NOT EXCEED 750'

CITY OF ROGERSVILLE	"T" HAMMERHEADS MINIMUM STANDARDS NTS	STR-5	
		DATE 9/1/21	REVISION

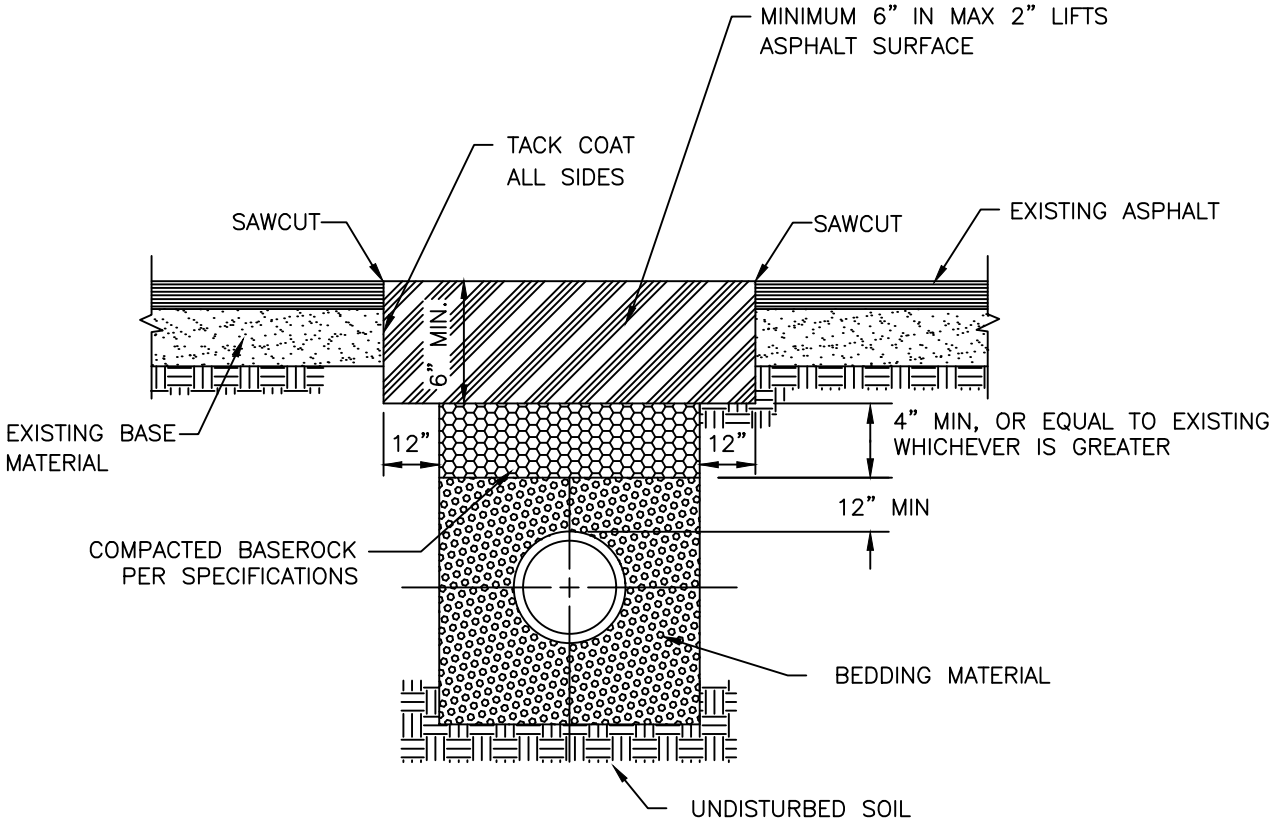

NOTES:
1. PROVIDE FLOWABLE FILL MIX TO TOP OF EXISTING ASPHALT FOR TEMPORARY DRIVING SURFACES.
2. COMPACTED BASE MUST HAVE OPTIMAL MOISTURE CONTENT AND BE COMPACTED TO 95% DENSITY EVERY LIFT FOOT
3. THE PUBLIC WORKS DIRECTOR MAY APPROVE A CONCRETE PATCH IN LIEU OF ASPHALT.

CITY OF ROGERSVILLE	ASPHALT STREET REPAIR DETAIL NTS	STR-6 DATE 9/1/21	REVISION

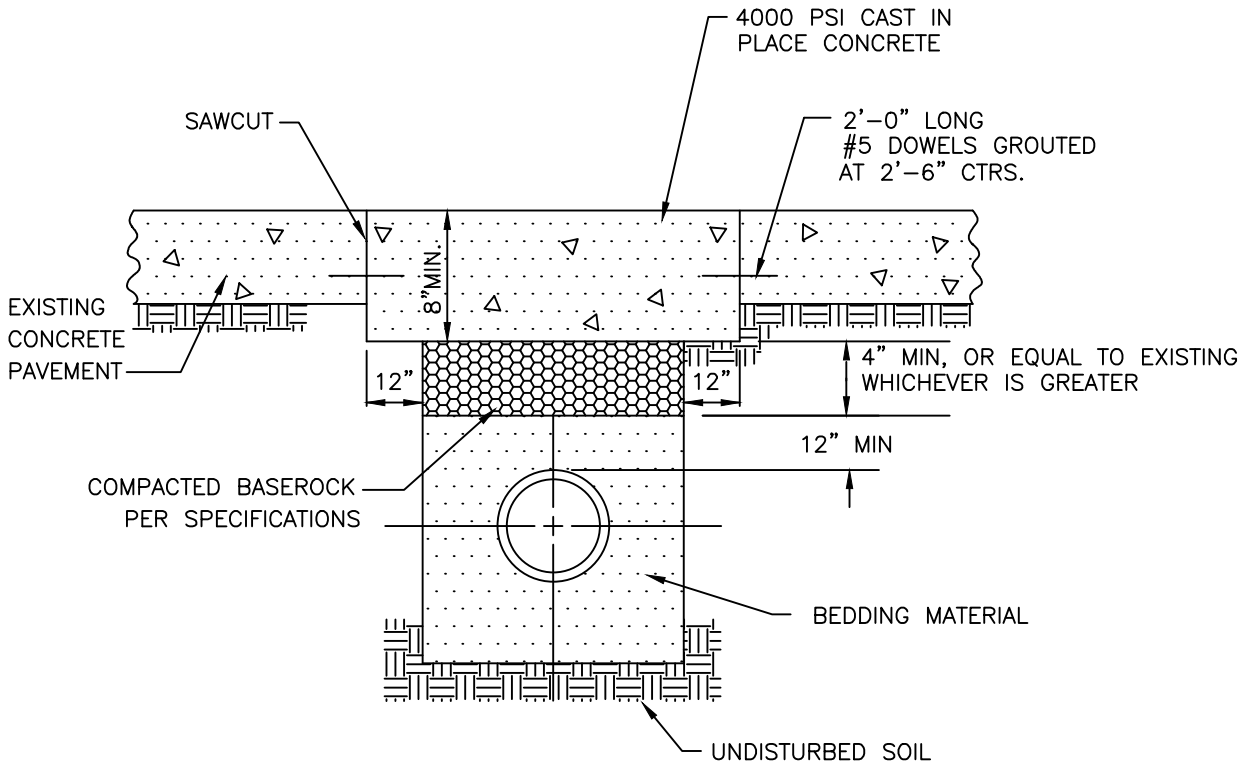

NOTES:
1. PROVIDE FLOWABLE FILL MIX TO TOP OF PATCH FOR TEMPORARY DRIVING SURFACE.
2. COMPACTED BASE MUST HAVE OPTIMAL MOISTURE CONTENT AND BE COMPACTED TO 95% DENSITY EVERY LIFT FOOT.
3. TEMPORARY 3" COLD MIX ASPHALT OR UPM PATCH MAY BE REQUIRED.

CITY OF ROGERSVILLE	CONCRETE STREET REPAIR DETAIL NTS	STR-7	
		DATE 9/1/21	REVISION

NOTE:
DOMES SHALL BE ALIGNED ON A SQUARE GRID IN THE PREDOMINANT DIRECTION OF TRAVEL TO PERMIT WHEELS TO ROLL BETWEEN DOMES.

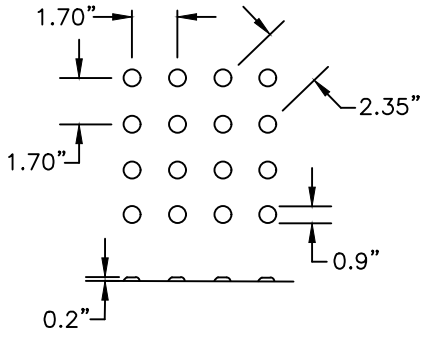

DOME SPACING

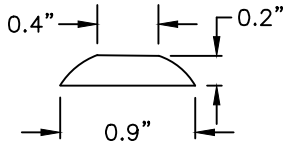

DOME SECTION

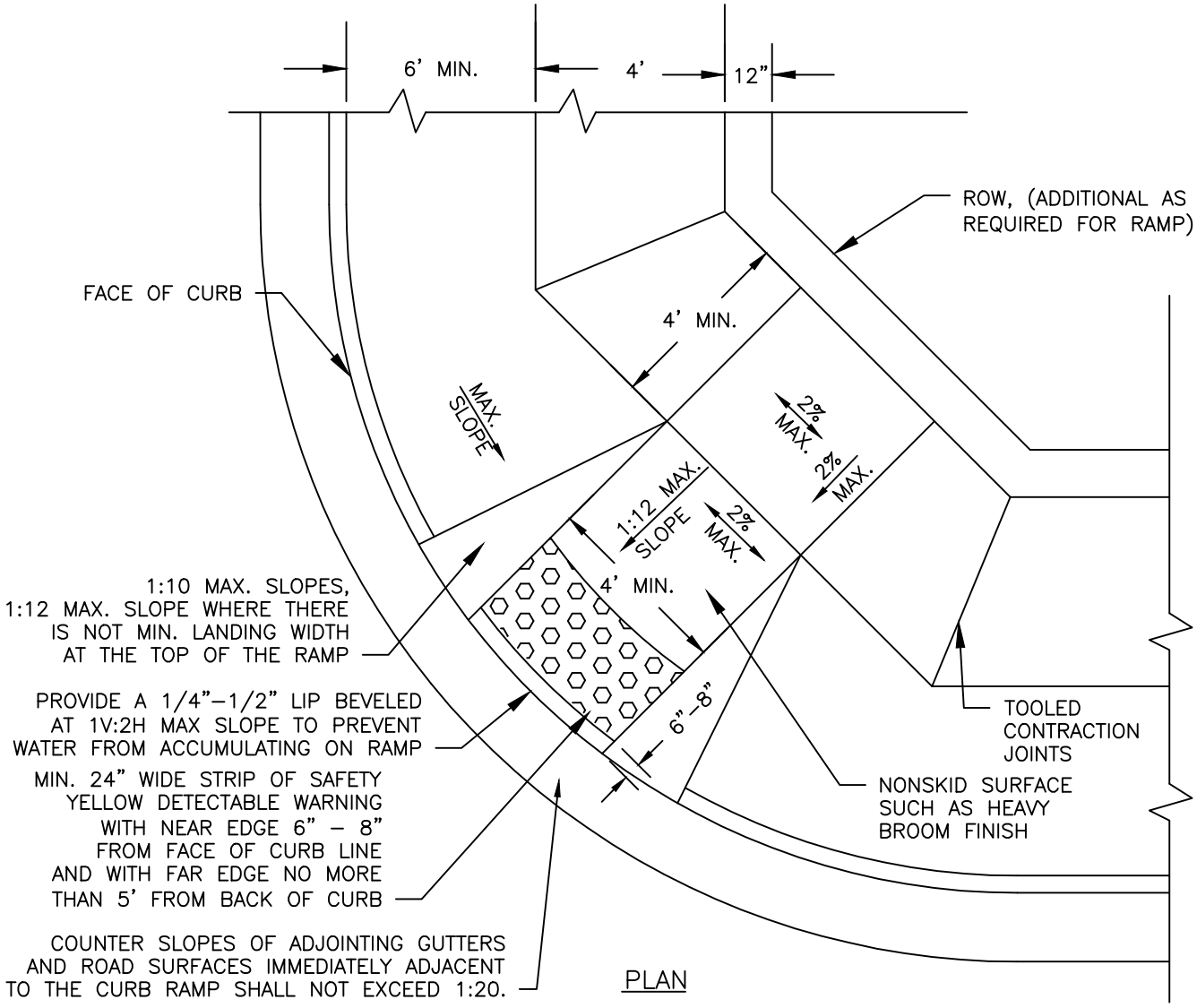

PLAN

NOTE: THE DETECTABLE WARNING SURFACES SHALL EXTEND THE FULL WIDTH OF THE CURB RAMP.

CITY OF ROGERSVILLE	CURB RAMP TYPE I	STR–8	
	NTS	DATE 9/1/21	REVISION

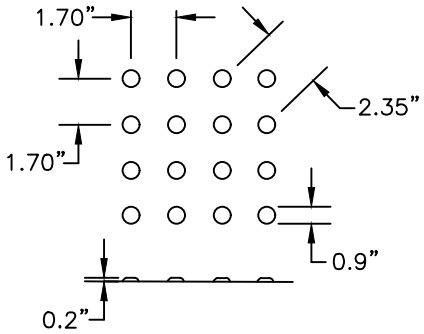

DOME SPACING

NOTE:
DOMES SHALL BE ALIGNED ON A SQUARE GRID IN THE PREDOMINANT DIRECTION OF TRAVEL TO PERMIT WHEELS TO ROLL BETWEEN DOMES.

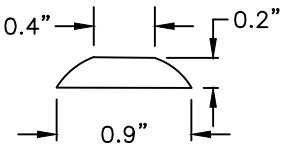

DOME SECTION

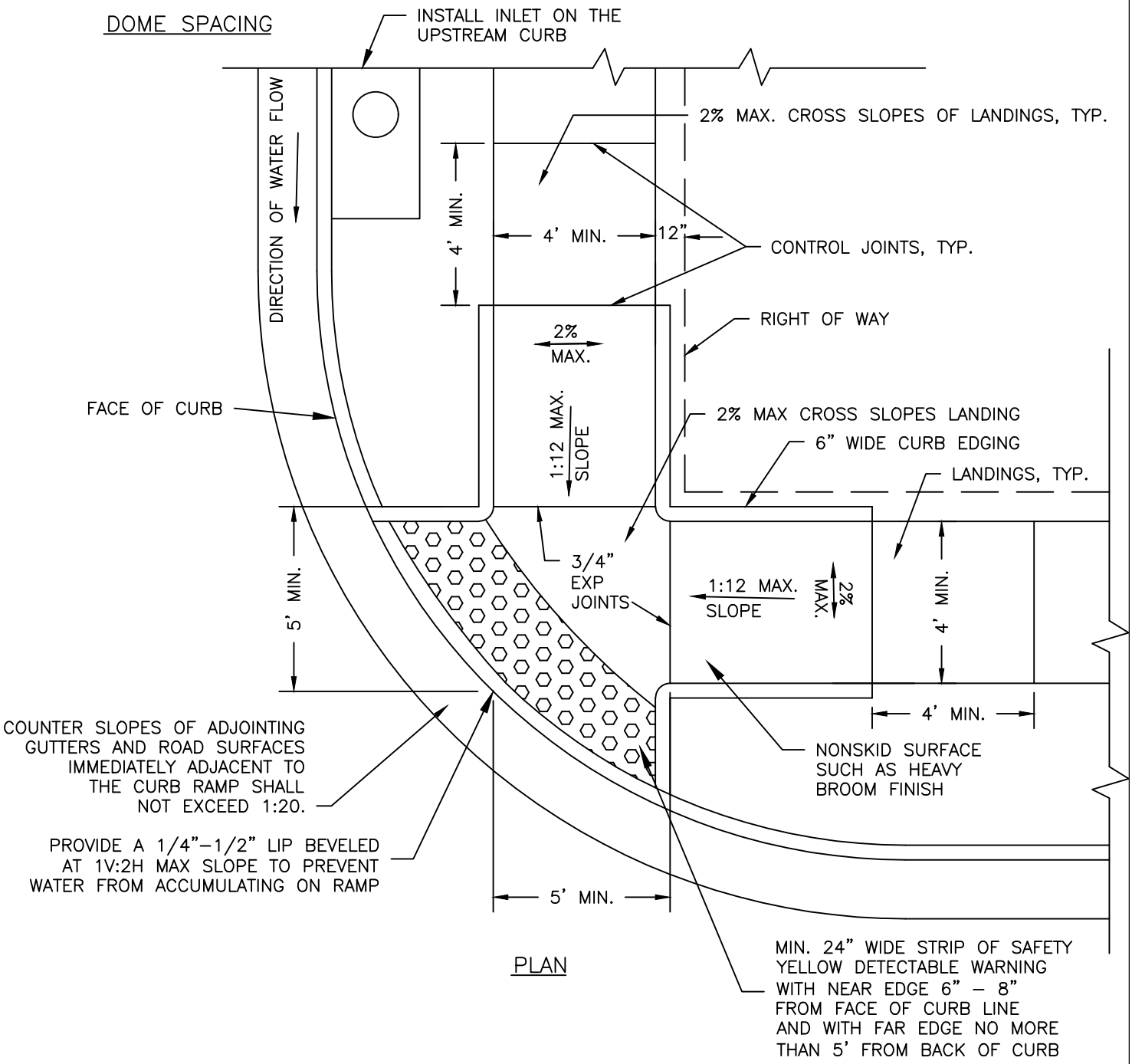

PLAN

NOTES: USE CURB RAMP TYPE II WHEN THE DISTANCE FROM FACE OF CURB TO THE RIGHT–OF–WAY DOES NOT PERMIT PROPER 1:12 MAXIMUM SLOPES. THE DETECTABLE WARNING SURFACES SHALL EXTEND THE FULL WIDTH OF THE CURB RAMP.

CITY OF ROGERSVILLE	CURB RAMP TYPE II	STR–9	
	NTS	DATE 9/1/21	REVISION

NOTE:
DOMES SHALL BE ALIGNED ON A SQUARE GRID IN THE PREDOMINANT DIRECTION OF TRAVEL TO PERMIT WHEELS TO ROLL BETWEEN DOMES.

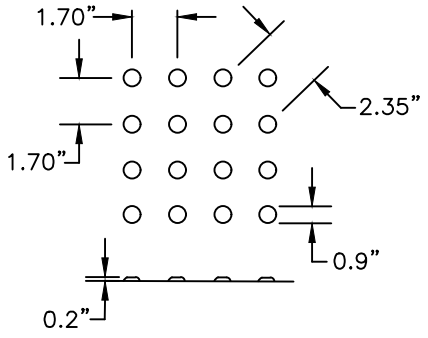

DOME SPACING

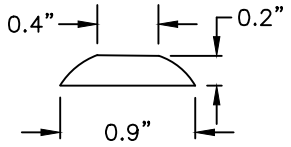

DOME SECTION

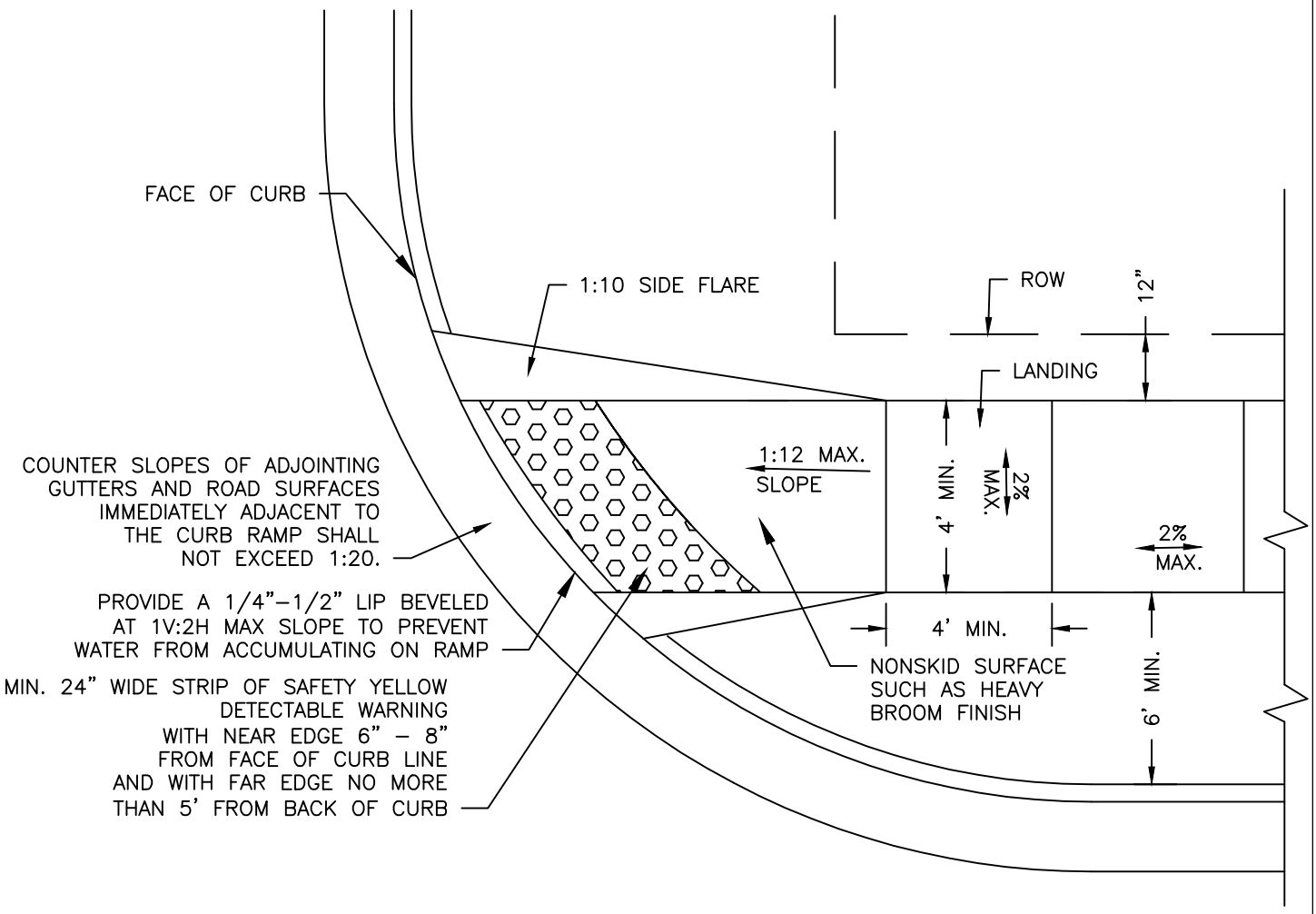

PLAN

NOTE: THE DETECTABLE WARNING SURFACES SHALL EXTEND THE FULL WIDTH OF THE CURB RAMP.

CITY OF ROGERSVILLE	CURB RAMP TYPE III	STR–10	
	NTS	DATE 9/1/21	REVISION

NOTE:
DOMES SHALL BE ALIGNED ON A SQUARE GRID IN THE PREDOMINANT DIRECTION OF TRAVEL TO PERMIT WHEELS TO ROLL BETWEEN DOMES.

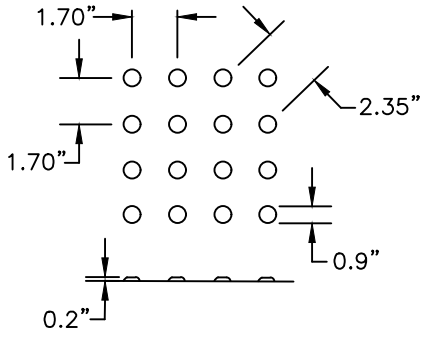

DOME SPACING

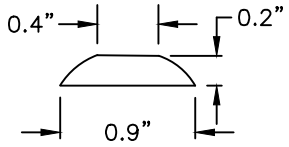

DOME SECTION

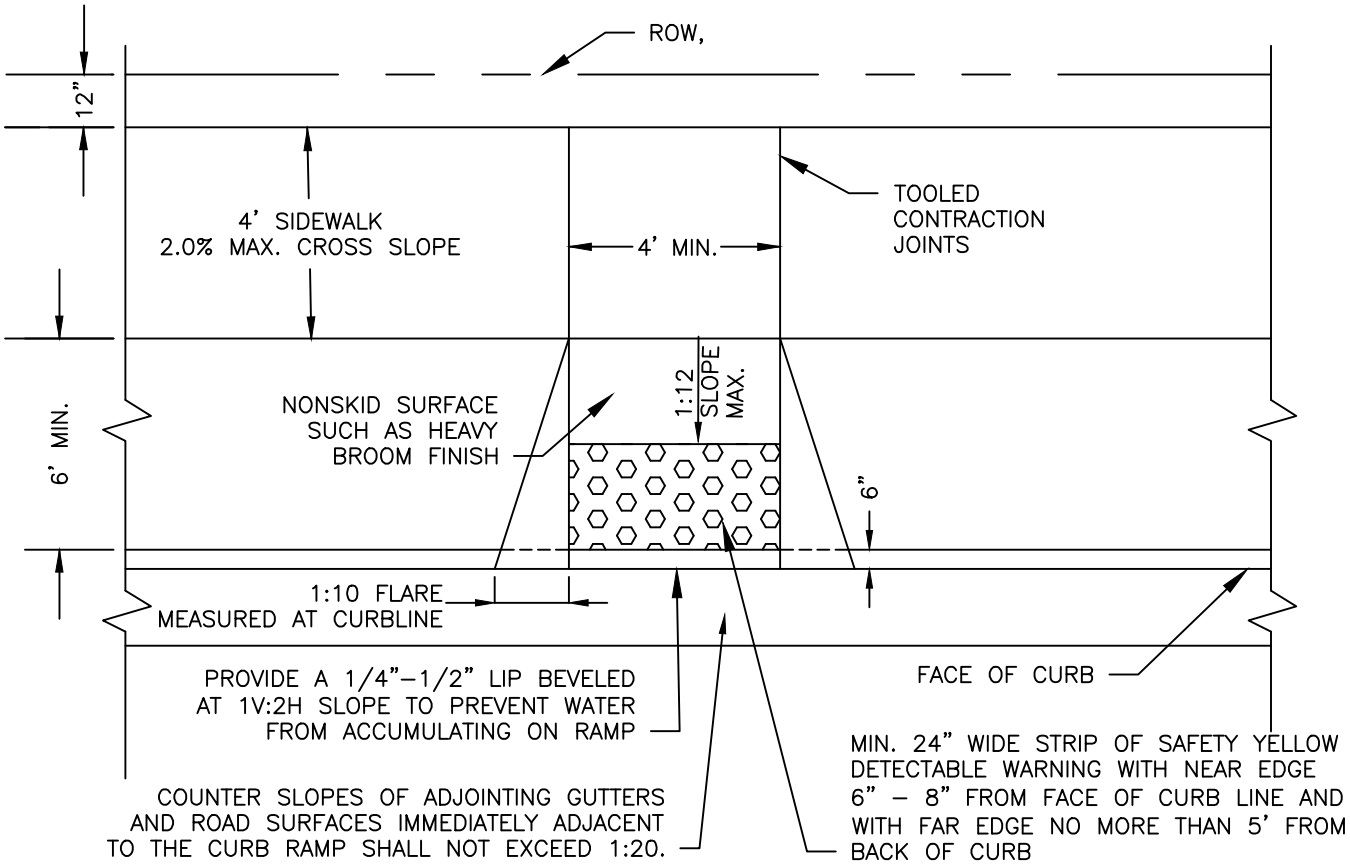

PLAN

NOTE: THE DETECTABLE WARNING SURFACES SHALL EXTEND THE FULL WIDTH OF THE CURB RAMP.

CITY OF ROGERSVILLE	CURB RAMP TYPE IV	STR–11	
	NTS	DATE 9/1/21	REVISION

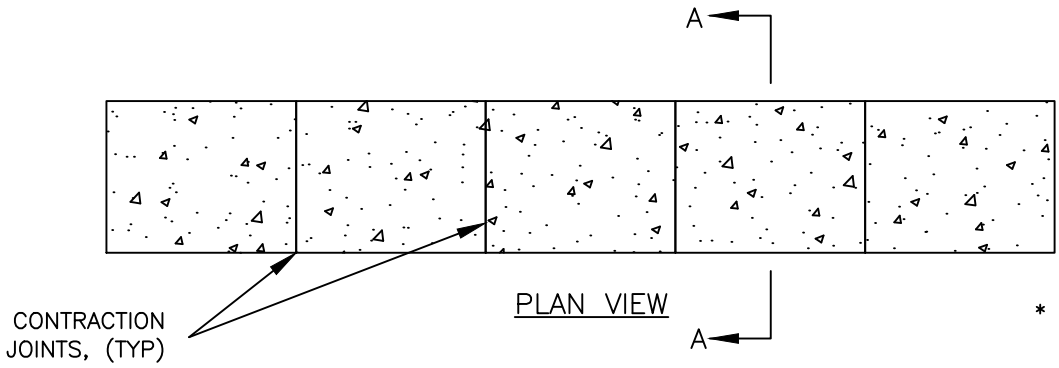

SECTION A–A
ELEVATION VIEW

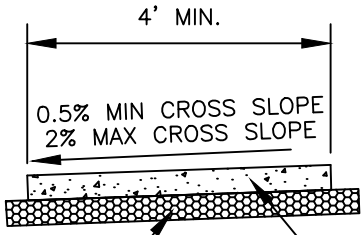

4"* THICK CONCRETE SIDEWALK
4000 PSI CONCRETE
@ 28 DAYS, WITH 7 +/–1%
TOTAL AIR–CONTENT

4" MIN. COMPACTED CRUSHED STONE
EXTEND 6" PAST BOTH EDGES OF SIDEWALK

SECTION A–A

* 4" THICKNESS SHALL BE CHANGED TO 6" AT DRIVEWAYS

NOTES:

1. JOINTS SHALL BE FORMED AT RIGHT ANGLES TO THE ALIGNMENT OF THE SIDEWALK AND TO THE DEPTHS INDICATED BELOW.
2. THE SIDEWALK SHALL BE MARKED OFF INTO SQUARE STONES BY CONTRACTION JOINTS. CONTRACTION JOINTS SHALL BE ONE EIGHTH (1/8) INCH WIDE BY ONE FOURTH (1/4) OF SECTION THICKNESS AND SHALL BE FORMED BY TOOLING.
3. EXPANSION JOINTS SHALL BE PLACED WHERE SIDEWALK ABUTS OTHER STRUCTURES AND SHALL NOT BE SPACED MORE THAN 50 FEET APART ON STRAIGHT RUNS FOR HAND LAID SIDEWALK AND NOT MORE THAN 100 FEET APART ON STRAIGHT RUNS FOR MACHINE LAID SIDEWALKS. EXPANSION JOINTS SHALL BE FORMED BY A THREE–FOURTH, (3/4) INCH THICK PREFORMED JOINT FILLER, EXTENDING THE FULL DEPTH OF THE SLAB, AND SECURED SO THAT THEY ARE NOT MOVED BY DEPOSITING AND COMPACTING THE CONCRETE AT THESE JOINTS.
4. ANY PART OF AN ACCESSIBLE ROUTE WITH A RUNNING SLOPE GREATER THAN 1:20 SHALL BE CONSIDERED A RAMP AND SHALL COMPLY WITH THOSE REGULATIONS.
5. ANY SIDEWALK LOCATED ADJACENT TO THE BACK OF CURB SHALL BE HAVE A MINIMUM WIDTH OF 6'.

CITY OF ROGERSVILLE	4' SIDEWALK DETAILS NTS	STR–12	
		DATE 9/1/21	REVISION

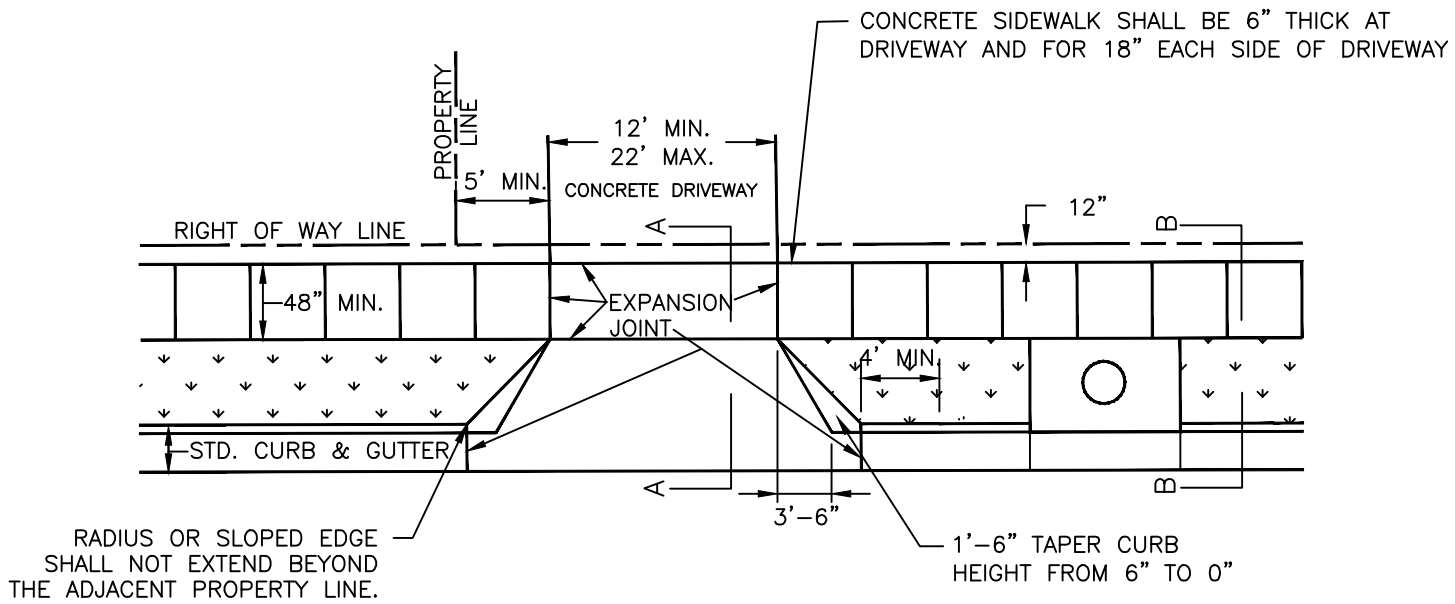

TYPICAL DRIVEWAY PLAN VIEW

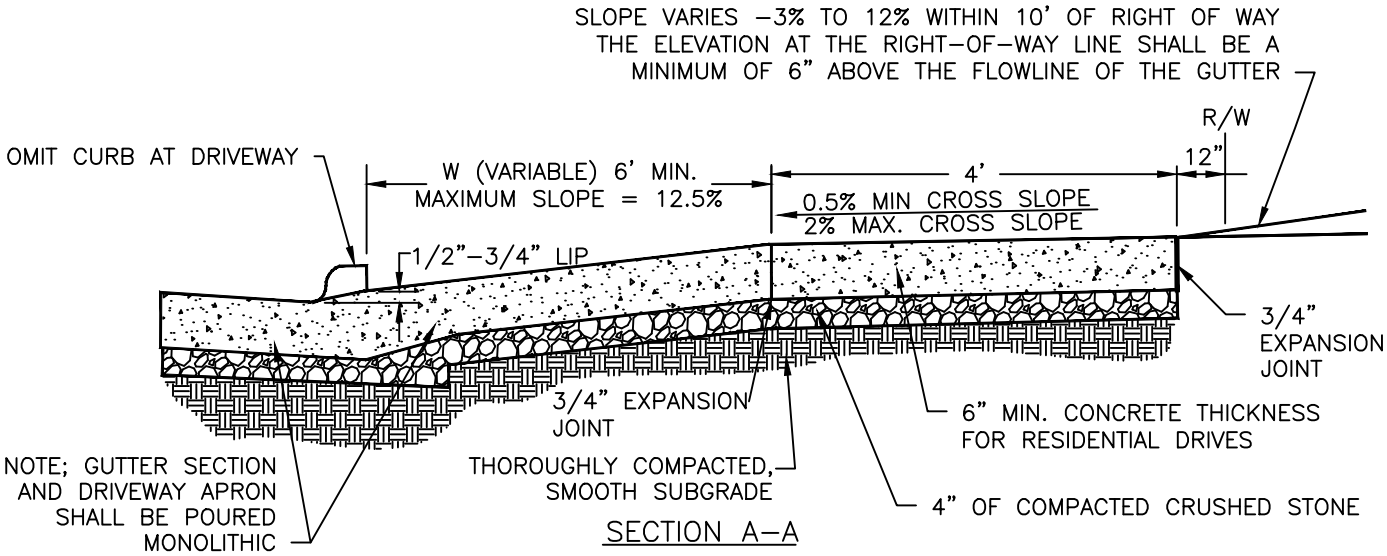

SECTION A-A

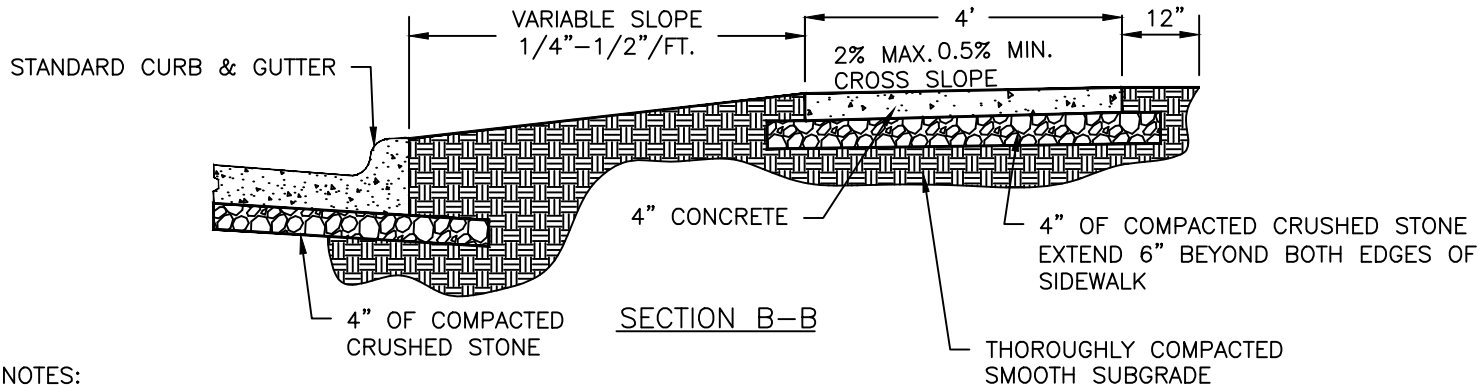

SECTION B-B

NOTES:

1. POSITIVE GUTTER FLOW SHALL BE MAINTAINED ACROSS ALL DRIVEWAYS.
2. REMOVAL OF EXISTING CURB/GUTTERS FOR DRIVEWAYS SHALL BE ACCOMPLISHED AT THE NEXT EXISTING JOINT.
3. DRIVEWAYS SHALL NOT BE LOCATED WITHIN 15' OF FIRE HYDRANTS. THEY SHALL ALSO NOT BE LOCATED OVER METER BOXES, VALVE BOXES OR MANHOLES. LOCATIONS OF DRIVEWAYS SHALL NOT INTERFERE WITH ANY OTHER UTILITY.
4. NO OBSTRUCTIONS SUCH AS POLES, SIGNS, ETC. SHALL BE LOCATED IN SIDEWALK.

CITY OF ROGERSVILLE	RESIDENTIAL DRIVEWAY AND SIDEWALK NTS	STR-13	
		DATE 9/1/21	REVISION

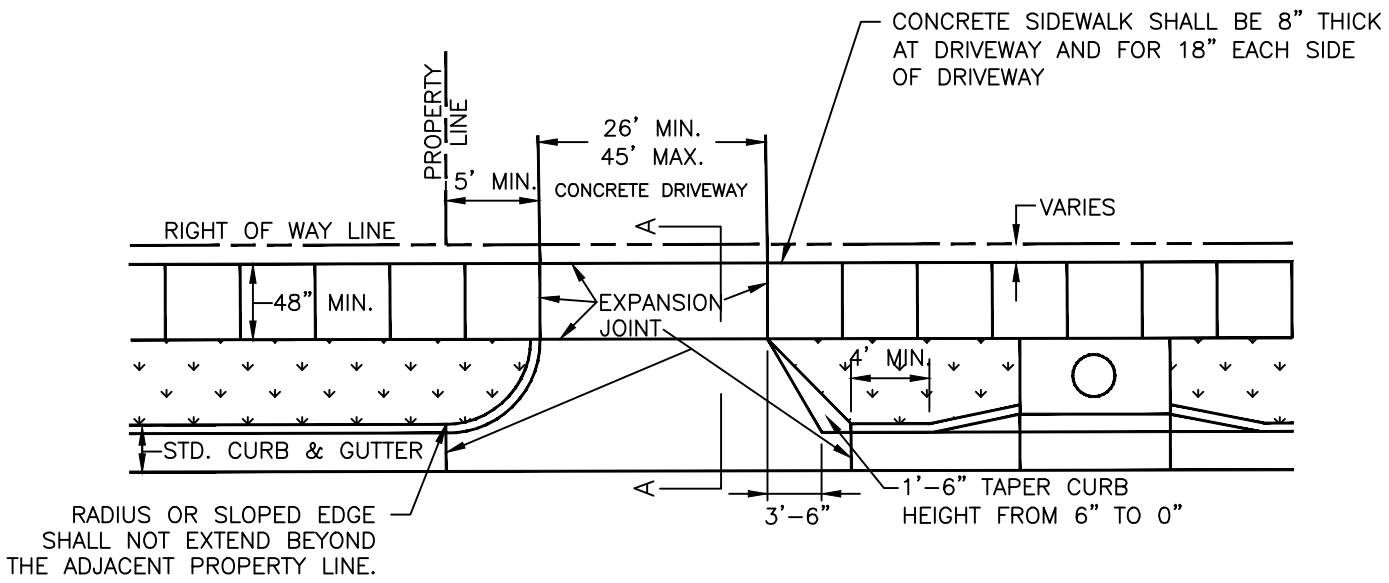

TYPICAL DRIVEWAY PLAN VIEW

REQUIRED DRIVEWAY GRADES				
	MAJOR ARTERIAL	SECONDARY ARTERIAL	COLLECTOR	RESIDENTIAL-COLLECTOR
A. DRIVEWAY APPROACH GRADE	1/4"/FT TO 1/2"/FT	1/4"/FT TO 5/8"/FT	1/4"/FT TO 3/4"/FT	1/4"/FT TO 1"/FT
B. MAXIMUM CHANGE OF GRADE AT BACK OF SIDEWALK	4%	5%	6%	8%
C. SLOPE WITHIN 10 FEET OF RIGHT-OF-WAY LINE	-2% TO 6% 1/4"/FT TO 3/4"/FT	-3% TO 7% -3/8"/FT TO 7/8"/FT	-4% TO 8% -1/2"/FT TO 1"/FT	-6% TO 10% -3/4"/FT TO 1-1/4"/FT

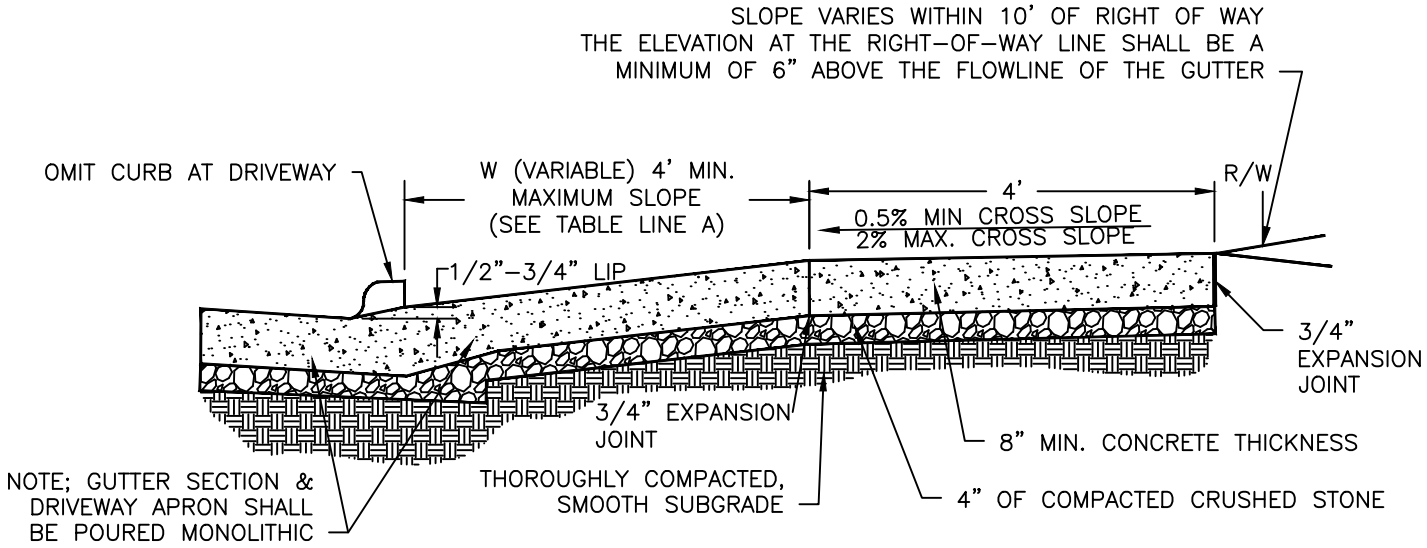

SECTION A-A

NOTES:
1. POSITIVE GUTTER FLOW SHALL BE MAINTAINED ACROSS ALL DRIVEWAYS.
2. REMOVAL OF EXISTING CURB/GUTTERS FOR DRIVEWAYS SHALL BE ACCOMPLISHED AT THE NEXT EXISTING JOINT.
3. DRIVEWAYS SHALL NOT BE LOCATED WITHIN 15' OF FIRE HYDRANTS. THEY SHALL ALSO NOT BE LOCATED OVER METER BOXES, VALVE BOXES OR MANHOLES. LOCATIONS OF DRIVEWAYS SHALL NOT INTERFERE WITH ANY OTHER UTILITY.
4. NO OBSTRUCTIONS SUCH AS POLES, SIGNS, ETC. SHALL BE LOCATED IN THE SIDEWALK.

CITY OF ROGERSVILLE	COMMERCIAL DRIVEWAY AND SIDEWALK NTS	STR-14	
		DATE 9/1/21	REVISION

CITY OF ROGERSVILLE

VALVE DETAILS

NTS

DATE 9/1/21

WAT-1

REVISION

NOTES:
1. ALL DIMENSIONS ARE IN INCHES UNLESS OTHERWISE NOTED
2. ALL VALVE BOXES SHALL BE CAST IRON.
3. EXTENSION STEMS SHALL BE PROVIDED FOR BURIED VALVES WHEN THE OPERATING NUT IS MORE THAN THREE FEET BELOW FINISHED GRADE.
4. EACH EXTENSION STEM FOR A BURIED VALVE SHALL EXTEND TO WITHIN THREE FEET OF THE GROUND SURFACE, SHALL BE PROVIDED WITH SPACERS WHICH WILL CENTER THE STEM IN THE VALVE BOX, AND SHALL BE EQUIPPED WITH A WRENCH NUT.

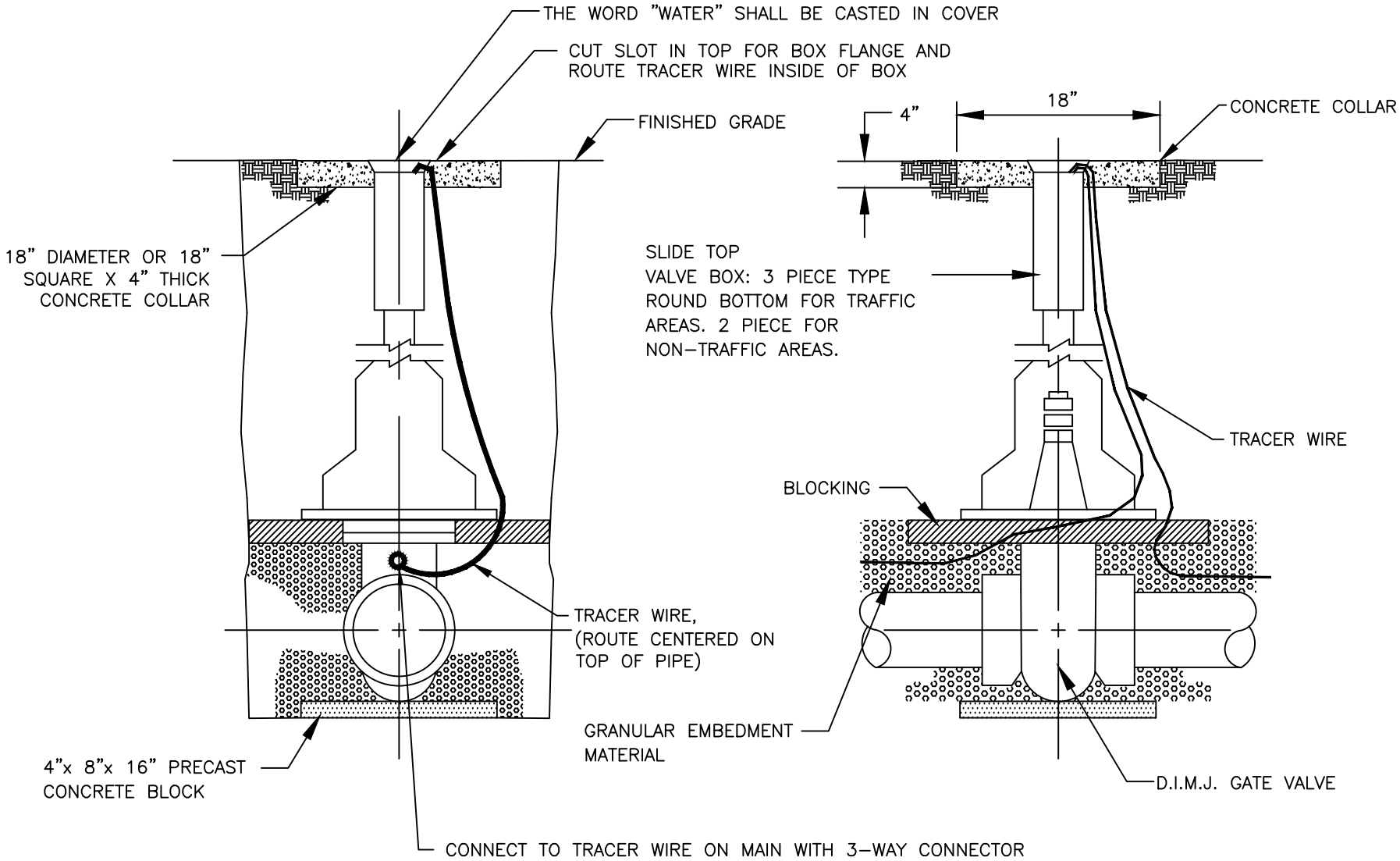

CITY OF ROGERSVILLE

FIRE HYDRANT DETAILS

NTS

DATE 9/1/21

WAT-2

REVISION

NOTES:

1. HYDRANTS SHALL BE TRAFFIC MODELS WITH BREAKAWAY FLANGES AND SHALL HAVE ONE 4-1/2" PUMPER NOZZLE AND TWO 2-1/2" NOZZLES. THE PUMPER NOZZLE SHOULD NORMALLY BE ORIENTED PERPENDICULAR TO THE STREET CURB.
2. HYDRANTS SHALL HAVE A MINIMUM 36 INCH WORKING CLEARANCE IN ALL DIRECTIONS FROM NOZZLES.
3. CONNECT GATE VALVE TO TEE WITH FOSTER ADAPTER.
4. ALL VALVE BOXES SHALL BE CAST IRON.
5. AVOID PLACING CONCRETE AROUND DRAIN HOLES.

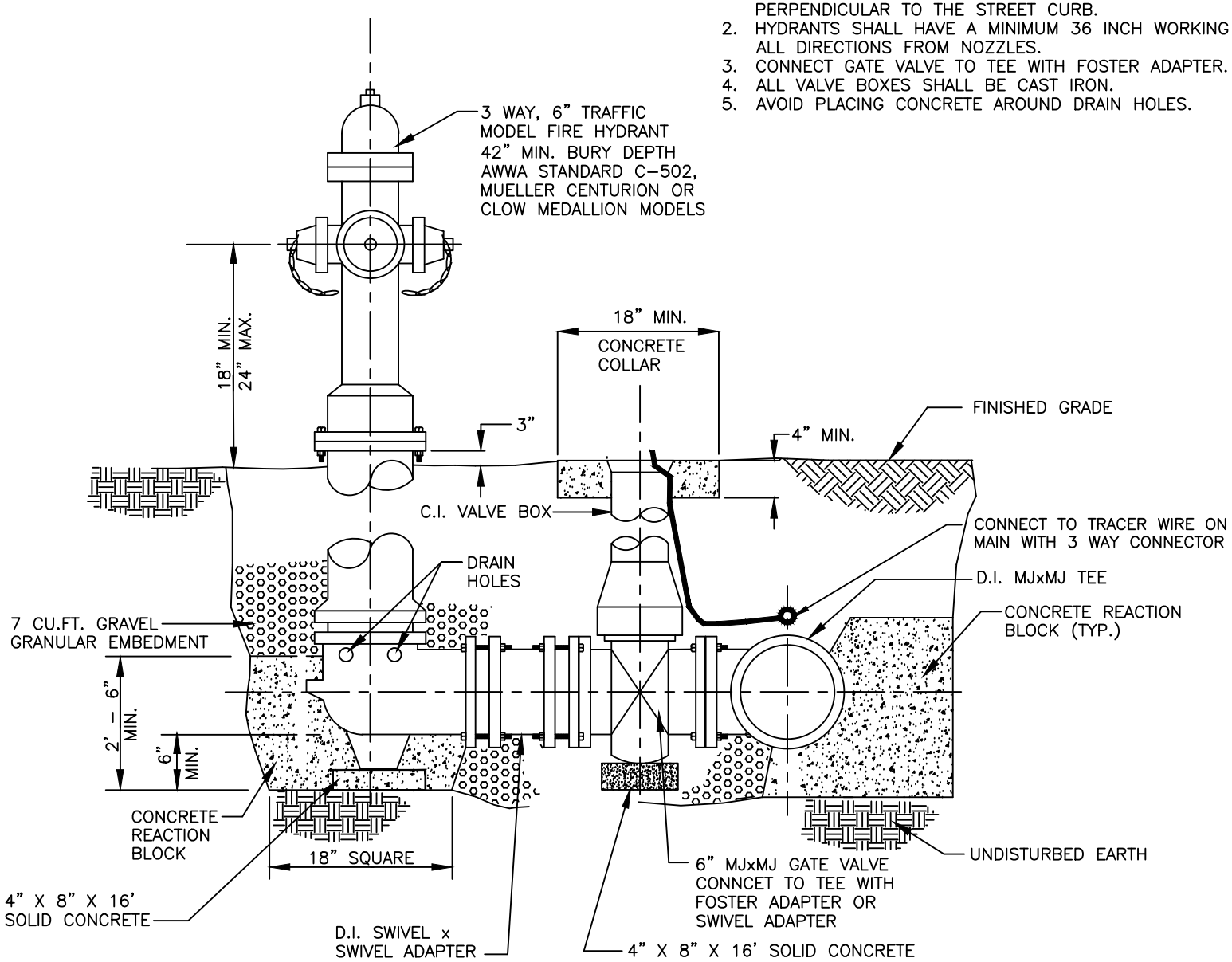

NOTES;

1. PROVIDE TRACER WIRE ON TOP OF THE SERVICE LINE FROM THE MAIN TO WITHIN THE WATER METER PIT.
2. TRACER WIRE SHALL BE PROVIDED FOR EVERY WATER SERVICE AND SHALL BE #12 AWG HIGH STRENGTH COPPER CLAD STEEL, (HS–CCS). CORROSION PROOF/FILLED WIRE CONNECTIONS SHALL BE USED AT SPLICE LOCATIONS.
3. THE TRACER WIRE CONDUCTIVITY SHALL BE TESTED PRIOR TO ACCEPTANCE.
4. WATER SERVICE SHALL BE PROVIDED TO EVERY BUILDABLE PLATTED LOT WITHIN A SUBDIVISION.
5. THE MAXIMUM NUMBER OF UNITS TO BE CONNECTED ON A 1" WATER SERVICE SHALL BE ONE EACH.

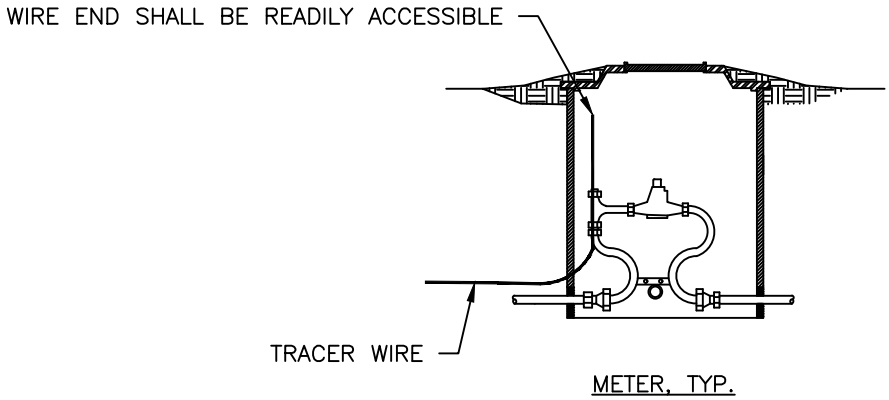

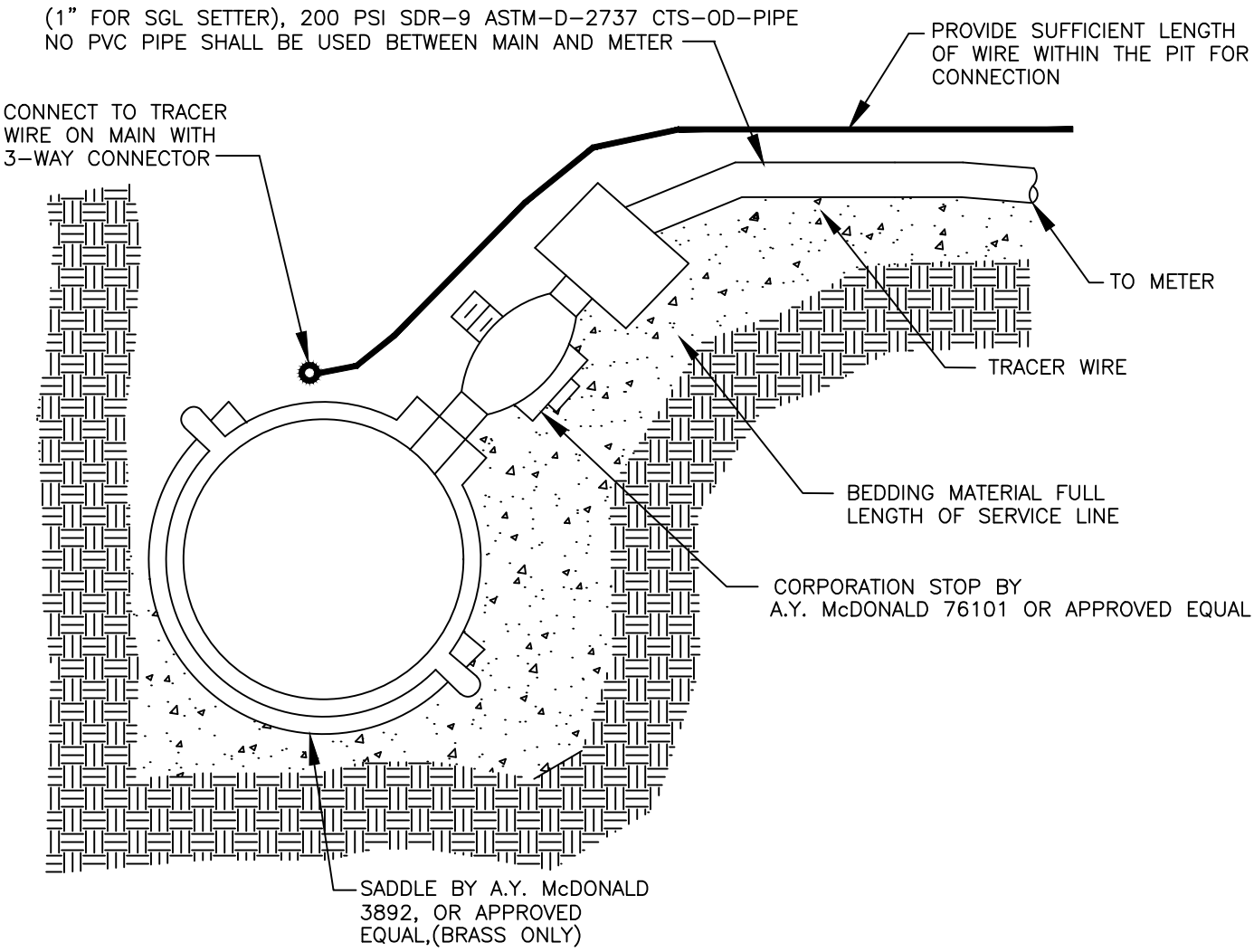

CITY OF ROGERSVILLE	CORPORATION STOP DETAIL NTS	WAT–3	
		DATE 9/1/21	REVISION

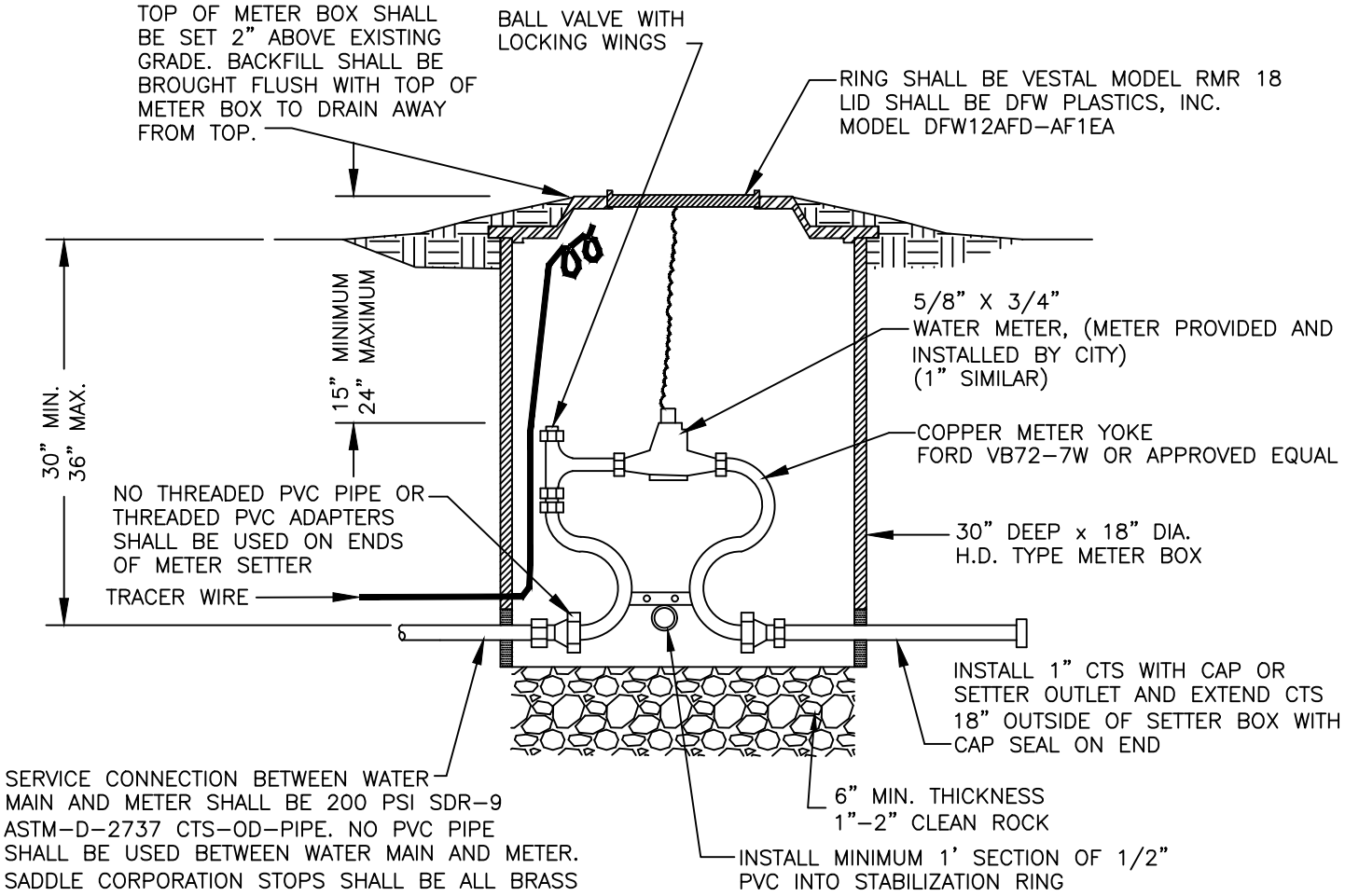

NOTES;

1. ALL SERVICE LINES REQUIRE TRACER WIRE BETWEEN THE WATER MAIN AND THE WATER METER.
2. SINGLE FAMILY UNITS, EACH UNIT OF A TOWNHOME, DUPLEX, TRIPLEX AND FOUR-PLEX SHALL NORMALLY BE PROVIDED WITH SEPARATE WATER METERS FOR EACH LIVING UNIT UNLESS OTHERWISE APPROVED BY THE CITY.
3. MULTI-FAMILY APARTMENT UNITS SHALL BE PROVIDED WITH ONE WATER METER FOR THE ENTIRE FACILITY.
4. METER LIDS AND METER BOXES LOCATED IN TRAFFICWAYS SHALL BE TRAFFIC RATED.

CITY OF ROGERSVILLE	5/8",3/4" & 1" METERS DETAIL NTS	WAT-4	
		DATE 9/1/21	REVISION

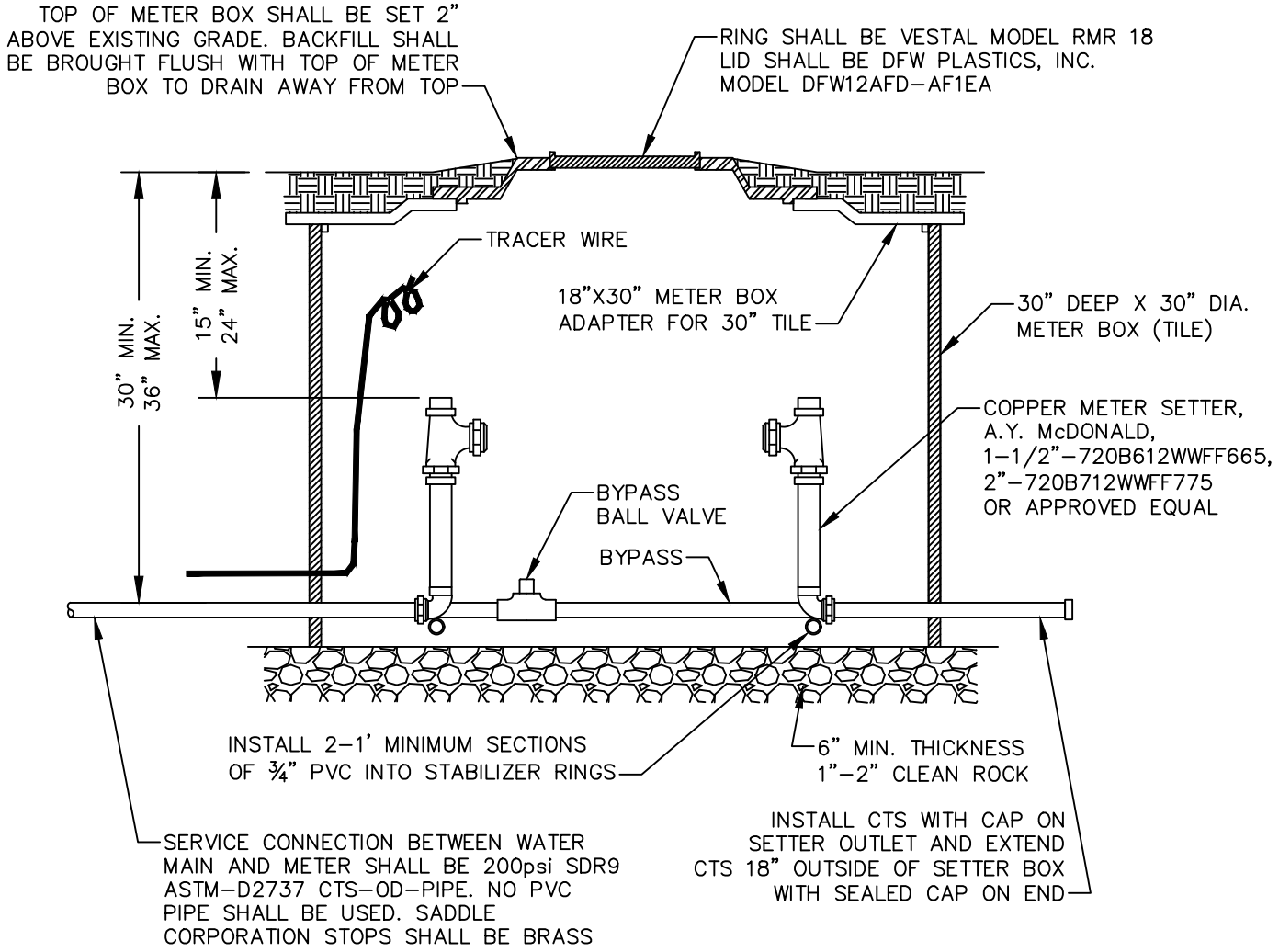

NOTES;
1. ALL SERVICE LINES REQUIRE TRACER WIRE BETWEEN THE WATER MAIN AND THE WATER METER
2. METER PROVIDED AND INSTALLED BY CITY OF ROGERSVILLE

CITY OF ROGERSVILLE	1½" & 2" COMMERCIAL METER	WAT-5	
	DETAIL NTS	DATE 9/1/21	REVISION